SIGN	DATE	DESCRIPTION	APPROVER

THIS IS CAD DRAWING, DO NOT REVISE MANUALLY!!!

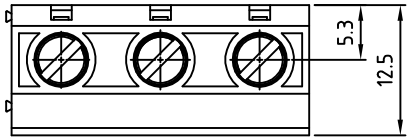

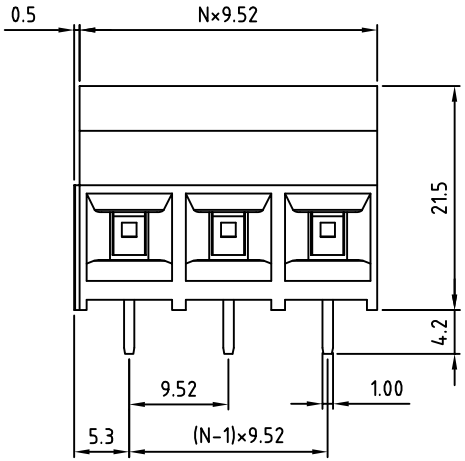

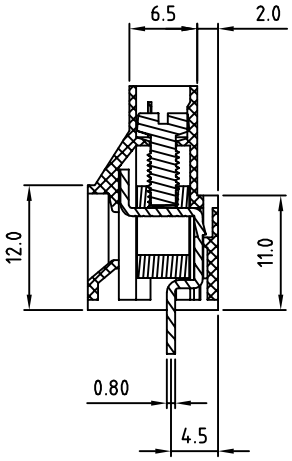

N=Number of poles

Material

- Terminal body
- (metal housing): Brass(CuZn)
- Terminal screw: Steel Zinc plating "-" slot type
- Contacts: Brass
- Surface of solder tail: Tin plated
- Insulator (housing): Thermoplastic (UL94V-0)

Electrical

- Voltage rating: 300VAC
- Current rating: 30A
- Wire range:
  Solid wire(AWG): 12-24
  Stranded wire(AWG): 12-24
- Torque(Lb-In): 4.3
- Screw: M3
- Wire strip length: 6-7mm
- Withstanding Voltage: 1.6KV
- Operating temperature: -30°C to +105°C
- Soldering temperature: 250°C±10°C/5 Sec
- Safety Approval: c us

RoHS Compliant

PART NUMBER:

OSTT7XX2150

No. of Poles
- 02 2 Poles
- 03 3 Poles
- ... ...
- 24 24 Poles

COLOR
- 0: Black
- 5: Green (Standard)
- 6: Blue
- 8: Grey

P.C.B LAYOUT

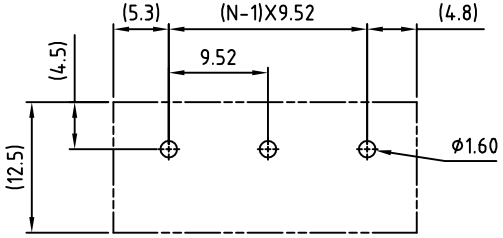

THESE DRAWINGS AND SPECIFICATIONS ARE THE PROPERTY OF ON-SHORE TECHNOLOGY, INC. AND SHALL NOT BE REPRODUCED, COPIED OR USED IN ANY MANNER WITHOUT THE PRIOR WRITTEN CONSENT OF ON-SHORE TECHNOLOGY, INC.

ON-SHORE TECHNOLOGY, INC.

TITLE	OSTT7 9.52mm Series 180D				
PART NO.	OSTT7XX2150			DWG NO.	OSTT7XX2150.DWG
APPROVED	CHECKED	DESIGNED	DRAWN	CUST NO.	
Shi Jun 2006.10.21	Shi Jun 2006.10.21	xionghaitao 2006.10.21	xionghaitao 2006.10.21	UNIT: mm / SCALE: NONE / SHEET: 01/01 / REV.: F	

Tolerance	
X.	±0.50
X.X	±0.30
X.XX	±0.10
X°	±1°