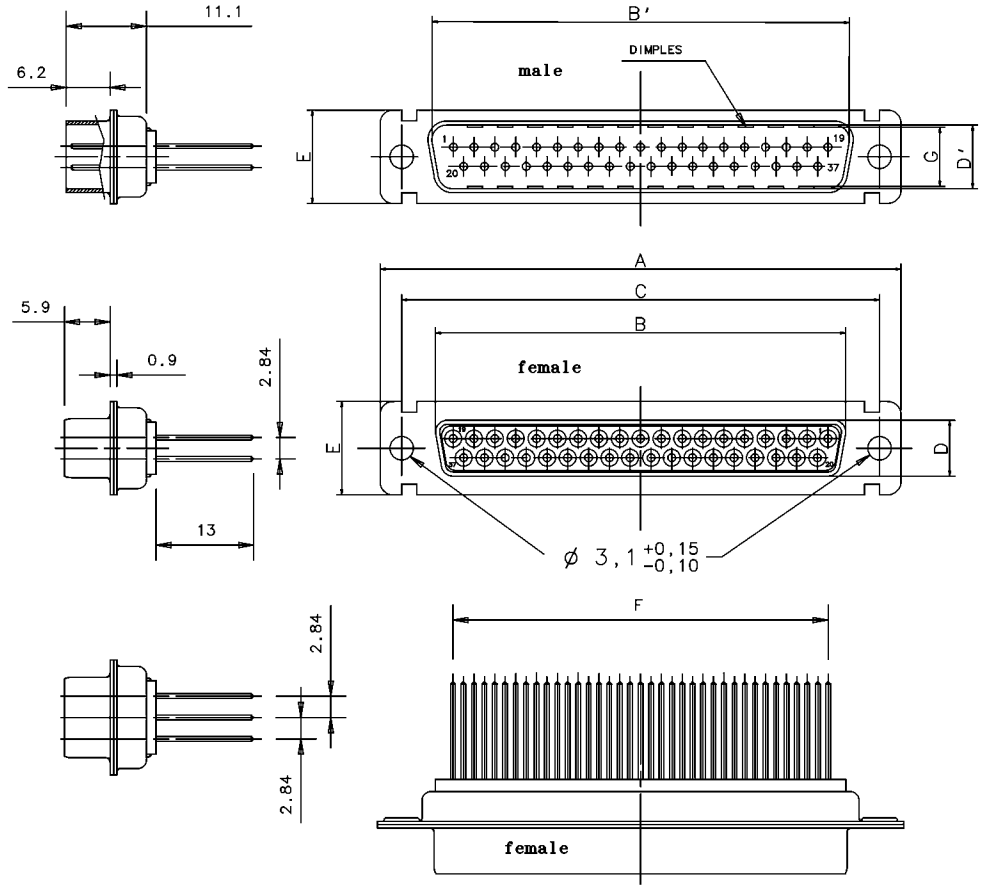

Taille boitier	A	B	B'	C	D	D'	E	F ±0,05	Pas	G	*
E	31,19 30,43	16,46 16,21	17,04 16,79	25,12 24,87	8,03 7,77	8,48 8,23	12,93 12,17	10,98	2.74	7,62	2x3
A	39,52 38,76	24,79 24,54	25,37 25,12	33,45 33,20	8,03 7,77	8,48 8,23	12,93 12,17	19,20	2.74	7,62	2x5
B	53,42 52,65	38,51 38,25	39,09 38,84	47,17 46,91	8,03 7,77	8,48 8,23	12,93 12,17	33,12	2.76	7,62	2x8
C	69,70 68,94	54,97 54,71	55,55 55,30	63,63 63,37	8,03 7,77	8,48 8,23	12,93 12,17	49,68	2.76	7,62	2x12
D	67,31 66,55	52,56 52,30	52,93 52,68	61,24 60,99	10,87 10,62	11,33 10,95	15,75 14,99	44,20	2.76	10,5	2x12

TECHNICAL DATA

'' D '' SUBMINIATURE CONNECTORS

SHELL: Steel .
finish :tinned
BODY: Glass filled thermoplastic.
Flame retardant to UL 94 V-0 .
Colour : black .

CONTACTS: Material for sockets : brass
Material for pins : brass
Finish of contact mating area :
Gold over Ni

ELECTRICAL: Voltage proof >1000 V Rms to 50Hz .
Nominal current 7,5 A (size20) 20 A (size8).
Contact resistance <5m Ohms .
Insulator resistance >5000 M Ohms.

CLIMATIC : Temperature range -55°C up to 85°C
Damp heat 21 days (+ 40 - 95 % RH)
Other climatic specifications in accordance
with NF C 93-425, sheet HE501 and MIL C 24-308 .

MECHANICAL: Mating and unmating force size E 30 N max. 3.5 N mini.
A 50 N max. 4.4 N mini.
B 83 N max. 8.0 N mini.
C 123 N max. 11.0 N mini.
D 166 N max. 14.5 N mini.

L **7D * ** * F179A

L = RoHS

77D Shell steel tinned
717D with Dimples plug only.

Shell size: E-A-B-C-D

Mounting type
Without

Configuration:
9- 15- 25- 37- 50

Contacts:
Wire Wrap
3 winding

Option:

Contact type : S = female
" : P = male

Amphenol Socapex
Usine de Dole

A	CREATION PLAN	N.Lo	24/11 2005		N°SERIE 017F	PLAN NOTICE	A
IND.	MODIFICATIONS	EXEC.	DATE	Approb		NOTICE-17D	IND.

ECH. ENS.

DATE DU TIRAGE DESIGNATION

L77DE09SF179A

COMMUNICATION ET UTILISATION INTERDITES SAUF AUTORISATION

info CAO : /PLAN2D/17DV37PF179
N OUTIL
N D'ETUDE