IDEAS-PLAN REALISE EN 2D UNIQUEMENT
NE PEUT ETRE MIS A JOUR QUE SUR CAO

N CLIENT

N OUTIL

N D'ETUDE

17SM-3

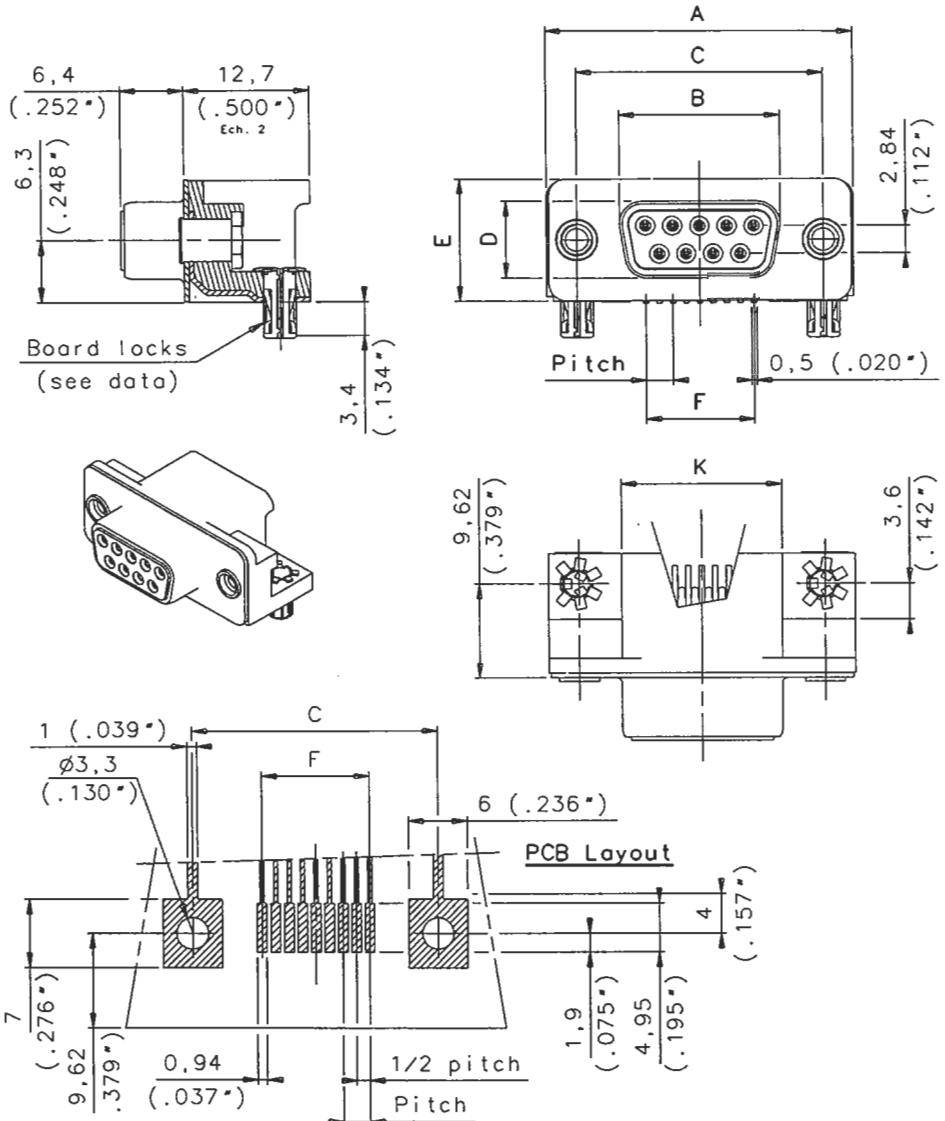

mm / inch TAILLE BOITIER / SHELL SIZE	A	B	C	D	E	PITCH	F	K
	+0.05 -0.1 / .002 -.004"	0 -0.2 / 0 -.008"	±0.1 / ±.004"	0 -0.25 / 0 -.01"	±0.2 / ±.008"			
E	31.15 / 1.226"	16.4 / .645"	25 / .984"	8.03 / .316"	12.4 / .488"	2.74 / .1078"	10.97 / .432"	16.3 / .642"
A	39.4 / 1.551"	24.8 / .976"	33.3 / 1.311"	8.03 / .316"	12.4 / .488"	2.74 / .1078"	19.2 / .756"	24.6 / .968"
B	53.3 / 2.098"	38.5 / 1.515"	47 / 1.850"	8.03 / .316"	12.4 / .488"	2.76 / .1086"	33.12 / 1.304"	38.3 / 1.508"

SUBMINIATURE 'D' CONNECTOR

SHELL		Steel with tin plating
BODY		Glass filled thermoplastic, flame retardant to UL 94 V0 (resist to short term temperature 500°F (260°C) Color : black
CONTACTS		Stamped and formed brass Finish of contact on mating area : gold Reminder : .100 u inch (2,5 Um) pure tin 100%
SCREWLOCKS		Brass with tin plating
BOARD LOCKS		Tin plating Insertion force: < 800 grams per connector
GROUNDING		Grounding strap: brass with tin-lead plating
ELECTRICAL	Voltage rating	300 VAC rms at 50 Hz
	Current rating	3 A
	Test voltage	> 1000 VAC at 50 Hz
	Contact resistance	< 10 M Ohms max. at rated current (mesured at the two extreme opposite parts of the contact)
	Insulation resistance	> 5000 M Ohms
CLIMATIC	Temperature range	85°C (peak 105°C)
	Damp heat	56 days (105°F -95% RH)
	Other climatic specifications	in accordance with NF C 93-425 sheet HE 501 and MIL C 24-308
MECHANICAL	Insertion force per contact	1,2 < F < 2,5 N
	Extraction force per contact	0,4 mini

Mating and unmating force	Mating	Unmating
Size E	30 N Max	3.5 N mini
Size A	50 N Max	4.5 N mini
Size B	83 N Max	8.0 N mini

MARKING	Amphenol ... (Series Number)
	Commercial reference
	Manufacturing Date

L17 SM2 09S 114 T

17 SM2 SMT version 2

Size
- 09S Position
- 15S Position
- 25S Position

Board locks / Grounding
- 1 Grounding Tabs + ZeFo boardlocks

Mounting style
- 1 Rear clinch nut #4-40
- 2 Rear clinch nut M3
- 6 Non removable front female screw lock #4-40

Contact Plating
- 1 0.1 Um Au
- 4 0.76 Um Au

Packaging
- T TUBE

A	CREATION PLAN	QUERE	30/07 2003		
IND.	MODIFICATIONS	EXEC.	DATE	Approb	

DATE DU TIRAGE | DESIGNATION

TOL. GEN.
VOLUME PIECE
SURFACE PIECE
PROTECTION
TRAITEMENT
MATIERE

Amphenol Socapex
Usine de Dole

ECH. 2 | ENS.
N SERIE 17T
DOSSIER NOTICE 17T

L17 SM2 09S 114 T

COMMUNICATION ET UTILISATION INTERDITES SAUF AUTORISATION