NEW PRODUCT

# IMT17

## DUAL PNP SMALL SIGNAL SURFACE MOUNT TRANSISTOR

## Features

- Epitaxial Planar Die Construction
- Small Surface Mount Package
- **Lead Free By Design/RoHS Compliant (Note 1)**
- **"Green" Device (Note 2)**

**SOT-26**

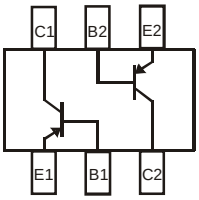


Schematic and Pin Configuration

## Mechanical Data

- Case: SOT-26
- Case Material: Molded Plastic. UL Flammability Classification Rating 94V-0
- Moisture Sensitivity: Level 1 per J-STD-020C
- Terminal Connections: See Diagram
- Terminals: Finish – Matte Tin Annealed Over Copper Leadframe. Solderable per MIL-STD-202, Method 208
- Marking Information: See Page 3
- Ordering Information: See Page 3
- Weight: 0.016 grams (approximate)

## Maximum Ratings @$T_A$ = 25°C unless otherwise specified

| Characteristic | Symbol | Value | Unit |
|---|---|---|---|
| Collector-Base Voltage | $V_{CBO}$ | -60 | V |
| Collector-Emitter Voltage | $V_{CEO}$ | -50 | V |
| Emitter-Base Voltage | $V_{EBO}$ | -5.0 | V |
| Continuous Collector Current | $I_C$ | -500 | mA |

## Thermal Characteristics

| Characteristic | Symbol | Value | Unit |
|---|---|---|---|
| Power Dissipation (Note 3) @$T_A$ = 25°C | $P_D$ | 300 | mW |
| Thermal Resistance, Junction to Ambient Air (Note 3) @$T_A$ = 25°C | $R_{\theta JA}$ | 417 | °C /W |
| Operating and Storage Temperature Range | $T_j$, $T_{STG}$ | -55 to +150 | °C |

## Electrical Characteristics @$T_A$ = 25°C unless otherwise specified

| Characteristic | Symbol | Min | Typ | Max | Unit | Test Condition |
|---|---|---|---|---|---|---|
| **OFF CHARACTERISTICS** (Note 4) | | | | | | |
| Collector-Base Breakdown Voltage | $V_{(BR)CBO}$ | -60 | — | — | V | $I_C$ = -100μA |
| Collector-Emitter Breakdown Voltage | $V_{(BR)CEO}$ | -50 | — | — | V | $I_C$ = -1.0mA |
| Emitter-Base Breakdown Voltage | $V_{(BR)EBO}$ | -5.0 | — | — | V | $I_E$ = -100μA |
| Collector Cutoff Current | $I_{CBO}$ | — | — | -0.1 | μA | $V_{CB}$ = -30V |
| Emitter Cutoff Current | $I_{EBO}$ | — | — | -0.1 | μA | $V_{EB}$ = -4.0V |
| **ON CHARACTERISTICS** (Note 4) | | | | | | |
| DC Current Gain | $h_{FE}$ | 120 | — | 390 | — | $V_{CE}$ = -3.0V, $I_C$ = -100mA |
| Collector-Emitter Saturation Voltage (Note 3) | $V_{CE(SAT)}$ | — | — | -0.6 | V | $I_C$ = -500mA, $I_B$ = -50mA |
| **SMALL SIGNAL CHARACTERISTICS** | | | | | | |
| Gain Bandwidth Product | $f_T$ | — | 200 | — | MHz | $V_{CE}$ = -5V, $I_E$ = 20mA, f = 100MHz |
| Output Capacitance | $C_{ob}$ | — | 7 | — | pF | $V_{CB}$ = -10V, $I_E$ = 0, f = 1MHz |

Notes:
1. No purposefully added lead.
2. Diodes Inc.'s "Green" policy can be found on our website at http://www.diodes.com/products/lead_free/index.php.
3. Device mounted on FR-4 PCB; pad layout as shown on Diodes Inc. suggested pad layout document AP02001, which can be found on page 4 or on our website at http://www.diodes.com/datasheets/ap02001.pdf.
4. Short duration pulse test used to minimize self-heating effect.


© Diodes Incorporated

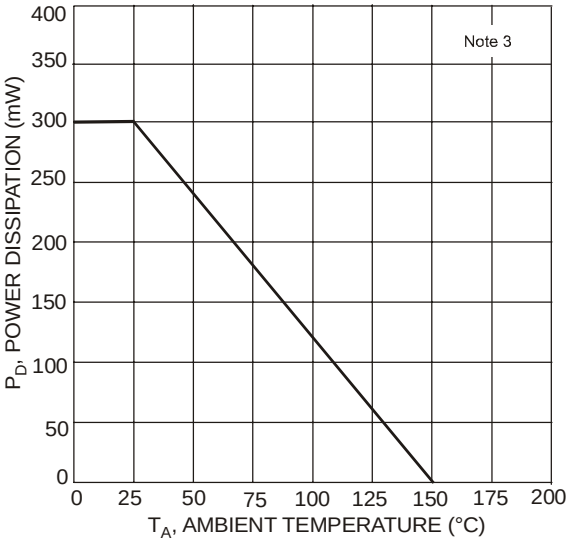


Fig. 1, Max Power Dissipation vs. Ambient Temperature

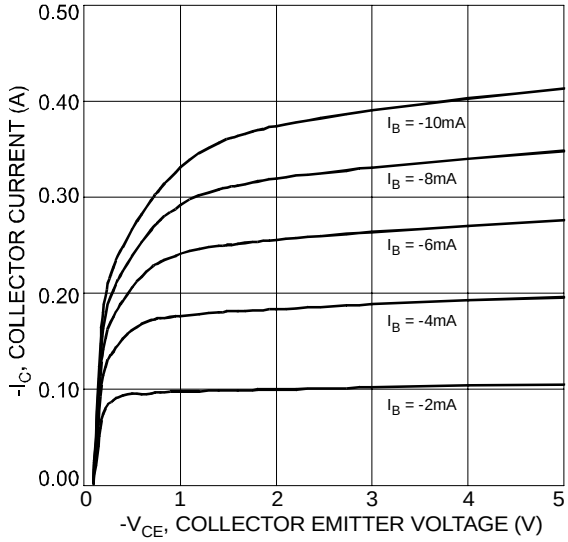


Fig. 2 Typical Collector Current vs. Collector-Emitter Voltage

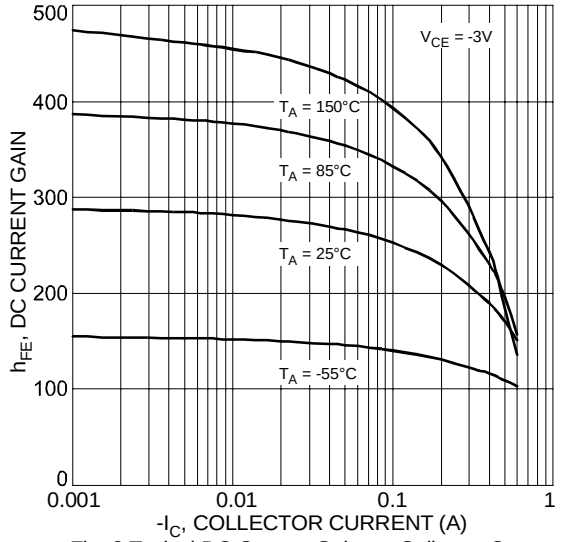


Fig. 3 Typical DC Current Gain vs. Collector Current

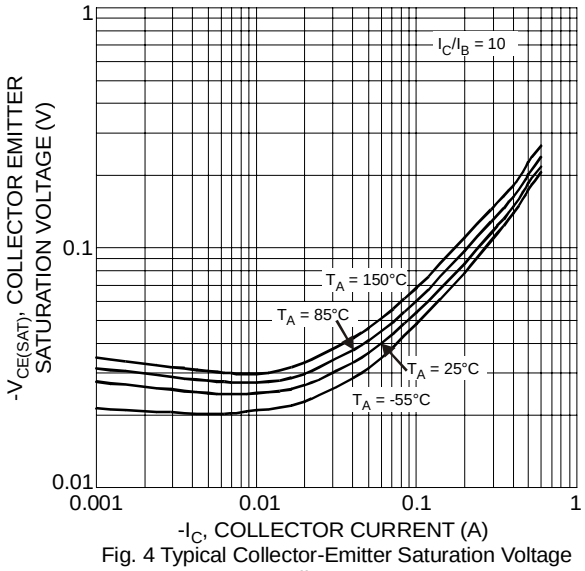


Fig. 4 Typical Collector-Emitter Saturation Voltage vs. Collector Current

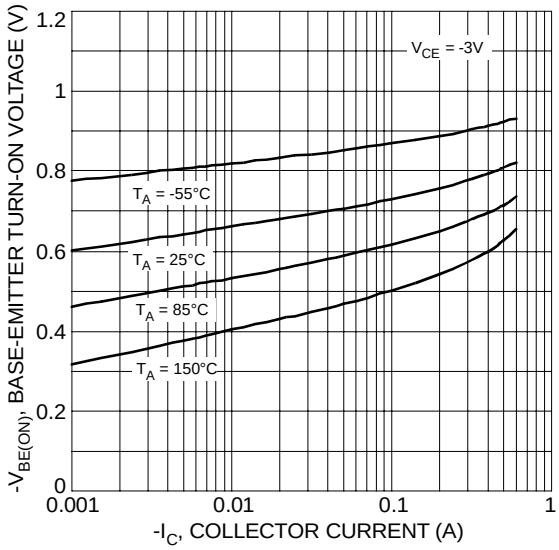


Fig. 5 Typical Base-Emitter Turn-On Voltage vs. Collector Current

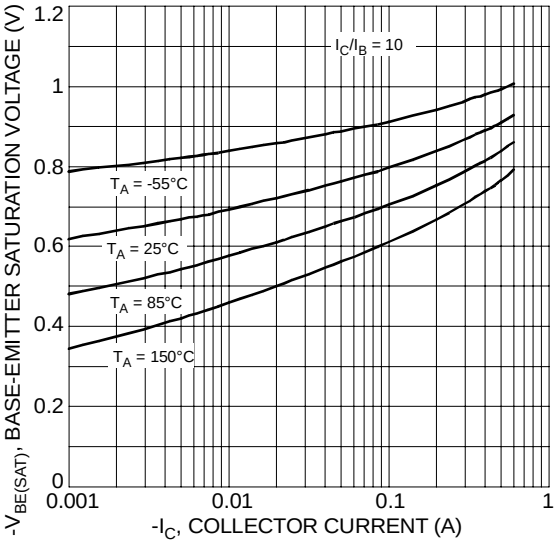


Fig. 6 Typical Base-Emitter Saturation Voltage vs. Collector Current


© Diodes Incorporated

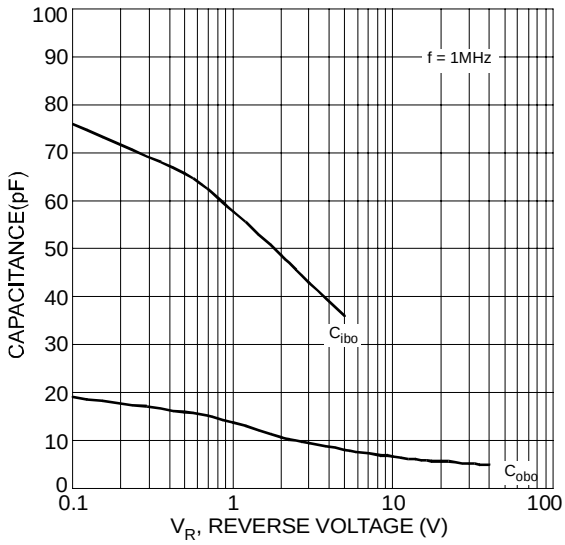


Fig. 7 Typical Capacitance Characteristics

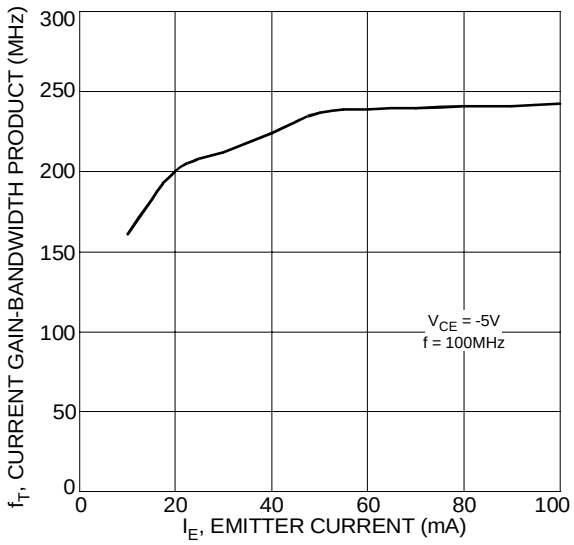


Fig. 8 Typical Gain-Bandwidth Product vs. Emitter Current

## Ordering Information (Note 5)

| Device | Packaging | Shipping |
|---|---|---|
| IMT17-7 | SOT-26 | 3000/Tape & Reel |

Notes: 5. For packaging details, go to our website at http://www.diodes.com/datasheets/ap02007.pdf.

## Marking Information

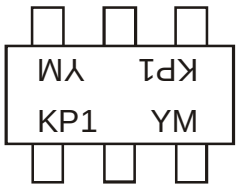


KP1 = Product Type Marking Code
YM = Date Code Marking
Y = Year ex: U = 2007
M = Month ex: 9 = September

Date Code Key

| Year | 2007 | 2008 | 2009 | 2010 | 2011 | 2012 |
|---|---|---|---|---|---|---|
| Code | U | V | W | X | Y | Z |

| Month | Jan | Feb | Mar | Apr | May | Jun | Jul | Aug | Sep | Oct | Nov | Dec |
|---|---|---|---|---|---|---|---|---|---|---|---|---|
| Code | 1 | 2 | 3 | 4 | 5 | 6 | 7 | 8 | 9 | O | N | D |

## Package Outline Dimensions

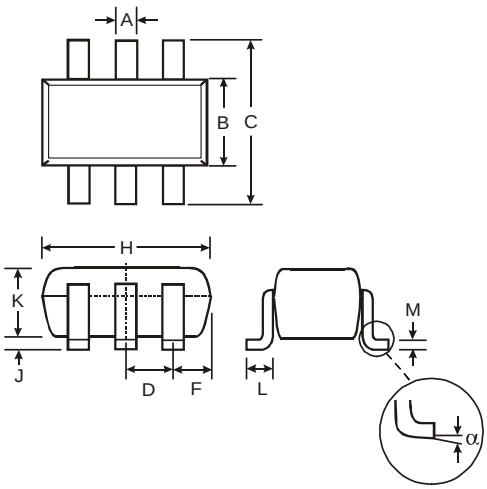


| SOT-26 | | | |
|---|---|---|---|
| Dim | Min | Max | Typ |
| A | 0.35 | 0.50 | 0.38 |
| B | 1.50 | 1.70 | 1.60 |
| C | 2.70 | 3.00 | 2.80 |
| D | – | – | 0.95 |
| F | – | – | 0.55 |
| H | 2.90 | 3.10 | 3.00 |
| J | 0.013 | 0.10 | 0.05 |
| K | 1.00 | 1.30 | 1.10 |
| L | 0.35 | 0.55 | 0.40 |
| M | 0.10 | 0.20 | 0.15 |
| α | 0° | 8° | – |
| All Dimensions in mm | | | |


© Diodes Incorporated

NEW PRODUCT

## Suggested Pad Layout

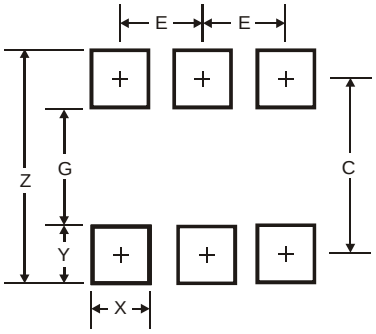


| Dimensions | Value (in mm) |
|---|---|
| Z | 3.20 |
| G | 1.60 |
| X | 0.55 |
| Y | 0.80 |
| C | 2.40 |
| E | 0.95 |


IMPORTANT NOTICE

Diodes Incorporated and its subsidiaries reserve the right to make modifications, enhancements, improvements, corrections or other changes without further notice to any product herein. Diodes Incorporated does not assume any liability arising out of the application or use of any product described herein; neither does it convey any license under its patent rights, nor the rights of others. The user of products in such applications shall assume all risks of such use and will agree to hold Diodes Incorporated and all the companies whose products are represented on our website, harmless against all damages.

LIFE SUPPORT

Diodes Incorporated products are not authorized for use as critical components in life support devices or systems without the expressed written approval of the President of Diodes Incorporated.




© Diodes Incorporated