BS,C ,201843,910	C

GEN. ST.	01	02	03	04	05	06	07	08	0D	50	60	70	80	90
INT. ST.	10 11 12 13 14 18 20 31 32 33 34 38 39 40 42 43 44 45 46 48 56 70 72 73 75 76 81 82 83 84 88													

REV.	DATE	DESCRIPTION	BY	C'K'D'
A	14-09-01	CONVERSION REVISION 02	KN	
B	28-05-02	EC B20086	MF	
C	22-09-05	105-0168	VIVEK	BKP

LOADING PATTERN MATING SIDE

POS	01				05					10					15					20					25
f	3	3	3	3	3	3	3	3	3	3	3				3	3	3	3	3	3	3	3	3	3	3
e	1	1	1	1	1	1	1	1	1	1	1				1	1	1	1	1	1	1	1	1	1	1
d	2	2	2	2	2	2	2	2	2	2	2				2	2	2	2	2	2	2	2	2	2	2
c	3	3	3	3	3	3	3	3	3	3	3				3	3	3	3	3	3	3	3	3	3	3
b	2	2	2	2	2	2	2	2	2	2	2				2	2	2	2	2	2	2	2	2	2	2
a	1	1	1	1	1	1	1	1	1	1	1				1	1	1	1	1	1	1	1	1	1	1
z	3	3	3	3	3	3	3	3	3	3	3				3	3	3	3	3	3	3	3	3	3	3

SHEET NR. : 993

LOADED CONNECTOR ASSEMBLY
(FOR EXAMPLE)

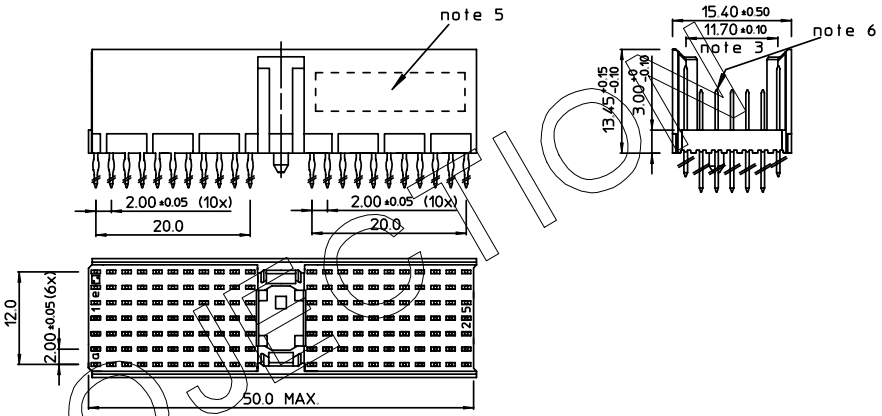

CONTACT OVERVIEW

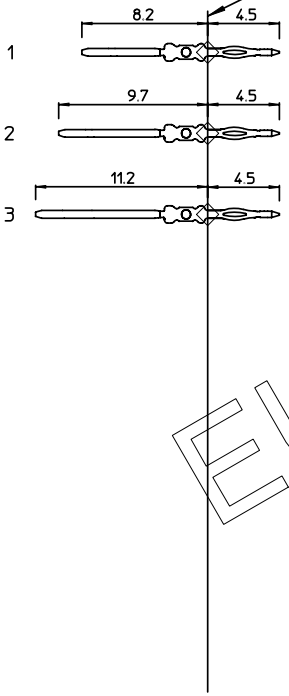

LAY-OUT P.C.B.-HOLE

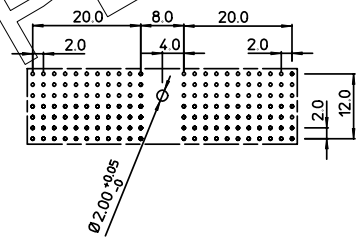

HM2P--P-----

LEAD FREE INDICATOR : LF = LEAD FREE
(DIGIT 15 & 16)

PLATING CODE (DIGIT 13 AND 14)
(REF DWG No. BS,C ,201844,003)

NOTES:

1. THIS PRODUCT IS CSA APPROVED.
2. THIS PRODUCT IS UL RECOGNIZED.
3. MEASURED AT THE BOTTOM.
4. MATERIAL CONTACT: PHOSPHORBRONZE
   HOUSING: CREAM WHITE GLASSFILLED POLYESTER UL-94V0
5. CONNECTOR PRINTED WITH P/N AND DATE CODE.
6. FOR ACTUAL CONTACT LOADINGS, SEE LOADING PATTERN MATING SIDE.
7. SHAPE OF CONNECTOR HOUSING CAN ALTER DEPENDING ON PRODUCTION LOCATION.
8. THE PRODUCT (LF) MEETS EUROPEAN UNION DIRECTIVES AND OTHER COUNTRY REGULATIONS AS DESCRIBED IN GS-22-008
9. FOR RECOMMENDED PTH DIMENSIONS REFER DRAWING : BS,A ,201572,001

EUROPEAN PROJECTION

THIS IS OUR EXCLUSIVE PROPERTY. IT IS NOT TO BE COPIED, REPRINTED OR DISCLOSED TO A THIRD PARTY, NOR USED FOR MANUFACTURING WITHOUT OUR WRITTEN CONSENT, AND HAS TO BE RETURNED TO US IN CASE OF NO USAGE

DIT IS ONZE EIGENDOM EN MAG NOCH NAGEMAAKT, HERDRUKT, OVERGEMAAKT AAN DERDEN, NOCH VOOR FABRIKATIE GEBRUIKT WORDEN, ZONDER ONZE SCHRIFTELIJKE TOELATING. BIJ NIET GEBRUIK IS TERUGZENDING VERPLICHT.

1DEC ±0,2 1DEC 2DEC ±0,1 2DEC ANGLES ±1° HOEKEN	APPR.	DATE	SIGN.	LOADING PATTERN OVERVIEW
	DRAFT	27-01-00	G.Nys	CAT. No. HM2P07PCF1G1----
	CHECKED			
WE RESERVE THE RIGHT TO CHANGE DIMENSIONS OR REQUIREMENTS WITHOUT PRIOR NOTICE.	PROD. MGR.			FCI MECHELEN N.V. A. SPINOYSTRAAT 8, 2800 MECHELEN — SCALE
	PR.ENG.MGR.			
ALL DIMENSIONS IN MM	PR.MGT.MGR.			
ALLE AFMETINGEN IN MM	REFERENCES/REFERENTIES			BS,C ,201843,910 — DRAWING No. — CUSTOMER DRAWING — C REVISION

PDM: Rev:C STATUS:Released Printed: Dec 02, 2007