BS,C ,202369,001	B

GEN. ST.	01	02	03	04	05	06	07	08	0D	50	60	70	80	90
INT. ST.	10 11	12 13	14 18	20 31	32 33	34 38	39 40	42 43	44 45	46 48	56 70	72 73	75 76	81 82 83 84 88

REV.	DATE	DESCRIPTION	BY	C'K'D'
A	2001-09-14	CONVERSION REVISION 00	KN	
B	2006-08-08	106-0144	ALEX B	BKP

ALLOWABLE REAR POST LENGTH FOR MALE SHROUDS

BACKPANEL THICKNESS / PART NR.	HM2H--P1	HM2H--P109	HM2H--P111	HM2H--P113	HM2H--P115	HM2H--P117	HM2H--P119	HM2H--P122	HM2H--P130
STAND-OFF HEIGHT	0 MM	0.9 MM	1.1 MM	1.3 MM	1.5 MM	1.7 MM	1.9 MM	2.2 MM	3.0 MM

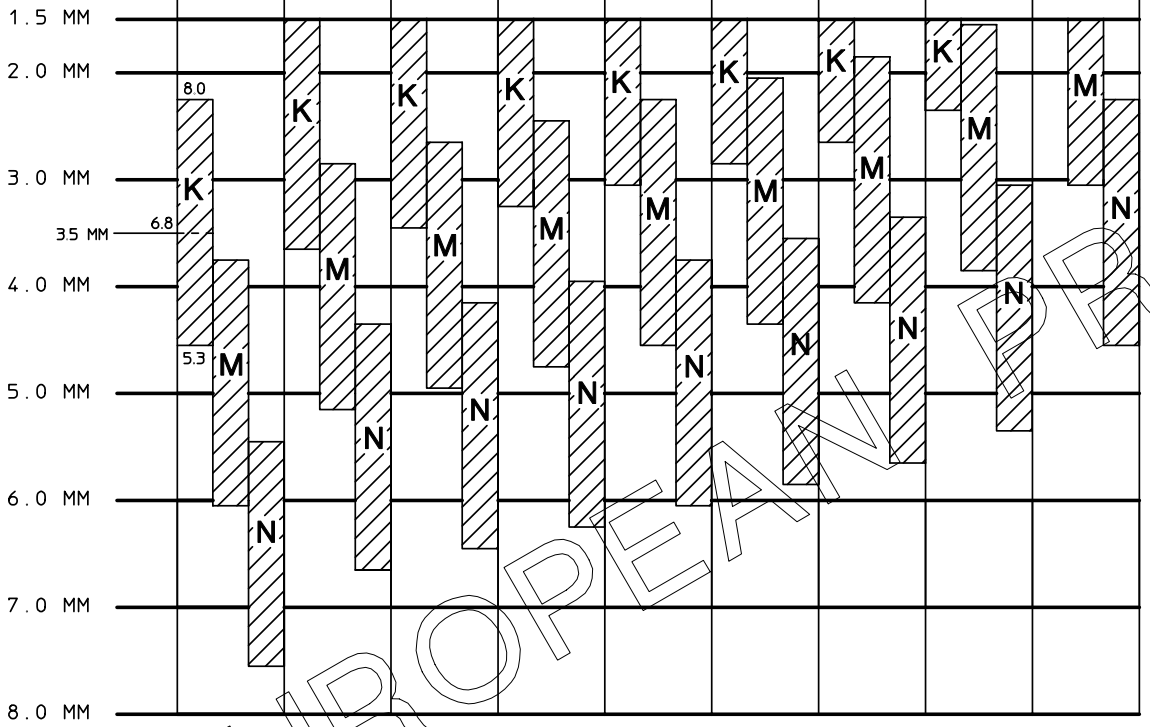

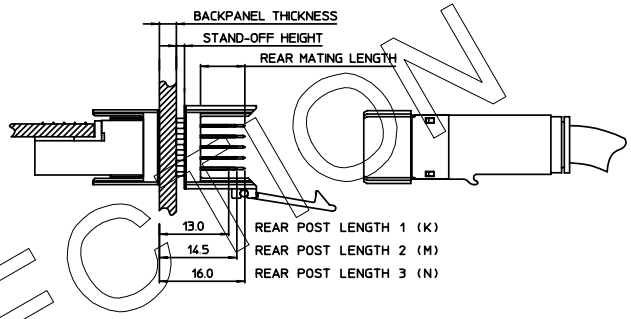

REAR POST LENGTH 1 (K) CORRESPONDS WITH FCI P/N HM2P--PK---0--
REAR POST LENGTH 2 (M) CORRESPONDS WITH FCI P/N HM2P--PM---0--
REAR POST LENGTH 3 (N) CORRESPONDS WITH FCI P/N HM2P--PN---0--

FOR EXAMPLE:

A BACKPANEL THICKNESS OF 3.5 MM IS APPLIED, WHICH SHROUD DO WE HAVE TO USE?

IF WE CHOOSE THE STANDARD HEADERS, WE WOULD RECOMMEND TO USE HM2H--P1 (0 MM STAND-OFF) IN COMBINATION WITH A K REAR POST LENGTH (13.0 MM), THEN WE WILL HAVE A REAR MATING LENGTH OF APPROXIMATELY 6.8 MM (SEE CHART).

IF WE SHOULD HAVE CHOSEN THE HM2H--P115 (1.5 MM STAND-OFF), THEN WE WOULD HAVE TO USE THE M REAR POST LENGTH, WHICH IS MORE EXPENSIVE.

NOTES:

1. THIS CHART IS FOR REAR CABLE CONN. APPLICATIONS, THIS MEANS A SINGLE MATING LEVEL FROM 5.3 MM MIN TO 8.0 MM MAX.
2. THIS CHART IS CALCULATED WITHOUT BACKPANEL TOLERANCES.
3. A MIN. WIPING LENGTH OF 2.5 MM MIN. IS GUARANTEED. (IN ACCORDANCE WITH THE IEC 1076-4-101 SPECIFICATION)
4. IF POSSIBLE, USE OUR STANDARD HEADERS (HM2H--P1 AND HM2H--P115)

EUROPEAN PROJECT VIEW

THIS IS OUR EXCLUSIVE PROPERTY. IT IS NOT TO BE COPIED, REPRINTED OR DISCLOSED TO A THIRD PARTY, NOR USED FOR MANUFACTURING WITHOUT OUR WRITTEN CONSENT, AND HAS TO BE RETURNED TO US IN CASE OF NO USAGE

DIT IS ONZE EIGENDOM EN MAG NOCH NAGEMAAKT, HERDRUKT, OVERGEMAAKT AAN DERDEN, NOCH VOOR FABRIKATIE GEBRUIKT WORDEN, ZONDER ONZE SCHRIFTELIJKE TOELATING. BIJ NIET GEBRUIK IS TERUGZENDING VERPLICHT.

1DEC ±0,2 2DEC ±0,1 ANGLES ±1°	APPR.	DATE	SIGN.	MILLIPACS 2 / SHROUD STAND-OFFS
	DRAFT	1997-09-09	W.Panis	CAT. No. HM2H--P1--
	CHECKED			
WE RESERVE THE RIGHT TO CHANGE DIMENSIONS OR REQUIREMENTS WITHOUT PRIOR NOTICE.	PROD. MGR.			FCI www.fciconnect.com — SCALE
	PR.ENG.MGR.			
ALL DIMENSIONS IN MM	PR.MGT.MGR.			
	REFERENCES			BS,C ,202369,001 — B
				DRAWING No. — CUSTOMER DRAWING — REVISION

PDM: Rev:B STATUS: Released Printed: Dec 03, 2007