LOADING POWER CONTACTS.

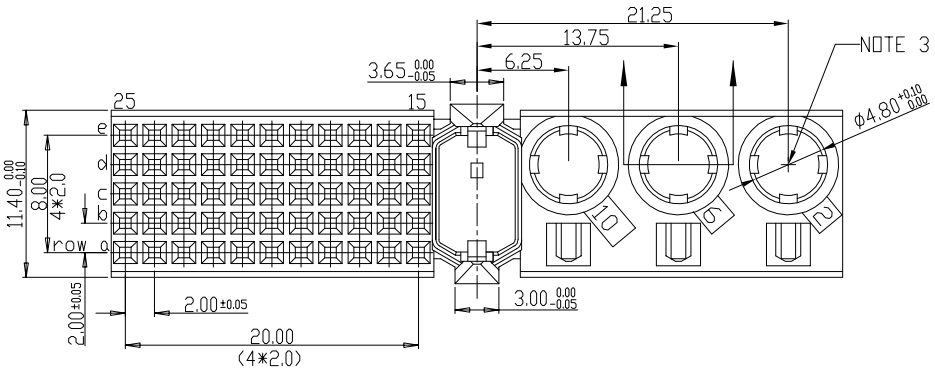

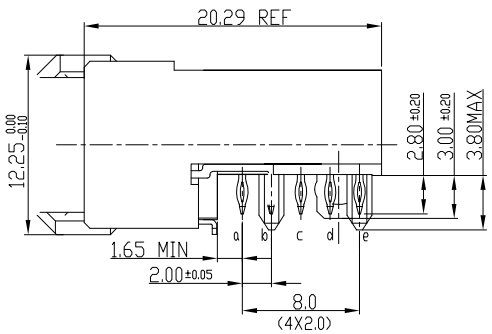

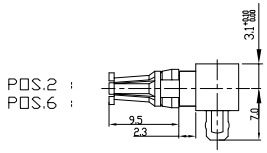

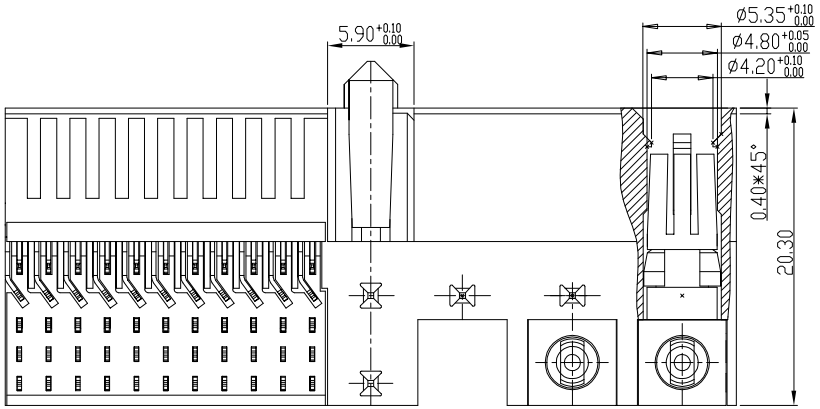

PERFORMANCE CHARACTERISTICS

CURRENT RATING: 1.5 A AT 20°C (FULLY LOADED)
1 A AT 70°C (FULLY LOADED)

RATED VOLTAGE:500 V AC (CONT /CONT)
OPERATING TEMPERATURE : -55°C TO 125°C
CONTACT RESISTANCE :20 mΩ MAX
INSERTION FORCE: 0.75N MAX/CONT
EXTRACTION FORCE : 0.15N MIN /CONT
INSULATION RESISTANCE: 10^4 MΩ MIN

NOTES

1. PLATING: HM2E--PH------LCLF — PLATING CODE (DIGIT 13 AND 14); OPTIONAL : DIGIT 15 AND 16

   -SIGNAL CONTACTS -> " -- " REF DWG NO. BSC201844003
   -POWER CONTACTS -> "--LC" = 0.8um Au over 2.0 um Ni
   all others = 1.5um Au over 2.0 um Ni

2. THIS PRODUCT IS CSA APPROVED.
   THIS PRODUCT IS UL RECOGNIZED.
3. FOR ACTUAL CONTACT LOADING SEE "LOADING POWER CONTACTS".
4. PCB RANGE : MIN 1.6 MM
5. PCB HOLE DEFINITION:

	Ø drilled hole	Cu plating	SnPb plating	Ø finished hole
5.1	3.19 - 3.25	25 um min.	5 um min.	3.02 - 3.20
5.2	0.675 - 0.725	25/50 um min.	4/10 um min.	0.55 - 0.65

6. THIS PRODUCT (LF) MEETS EUROPEAN UNION DIRECTIVES AND OTHER COUNTRY REGULATIONS AS DESCRIBED IN GS-22-008

LAY-OUT P.C.B.- HOLE

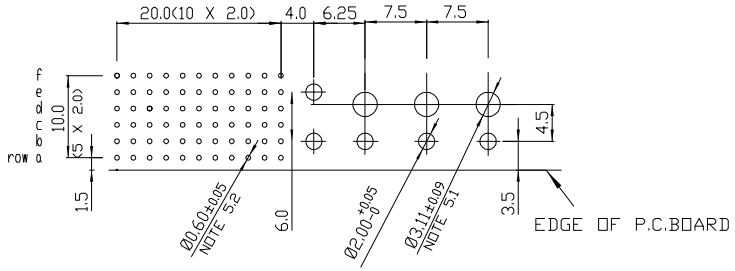

rev	ecn no	dr	date
A	CONVERSION REVISION 03	KN	14-09-01
B	EC B20030	MF	12-02-02
C	DG05-0381	Kason	10-10-05

Material			Spec ref		
Mat code			tolerance: 1DEC±0.2 1DEC 2DEC ± 0.10 2DEC ANGLES±1°HDEKEN	projection	MM
Heattreat					
Plating/Finish					
Dr	M.Fret	19-05-00		size A4	Scale 1.500
Eng			Product family	MILLIPICS	
Chr			Model Name		ECN
Appr			Model Revision		REL Level
FCI	title	MPACS 5R RA RCP CONN TYPE M	dwg no	BSC202444010	Rev. C
Pro/E file	catalog no	HM2E31PH6090--(LC)LF	CUSTOMER	sheet 1 of 1	

Tous droits strictement reserves. Reproduction ou communication a des tiers interdite sous quelque forme que ce soit sans autorisation ecrite du proprietaire. Propriete de c FCI. Droits de reproduction FCI.

All rights strictly reserved. Reproduction or issue to third parties in any form whatever is not permitted without written authority from the proprietor. Property of FCI. Copyright FCI.