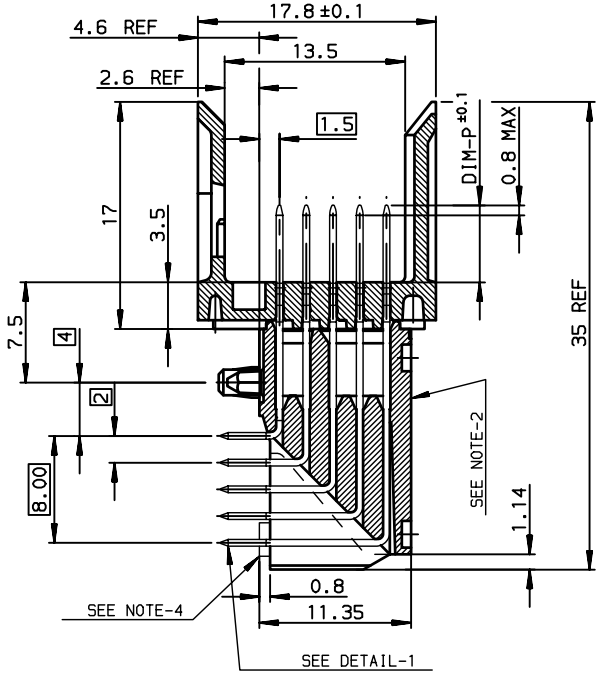

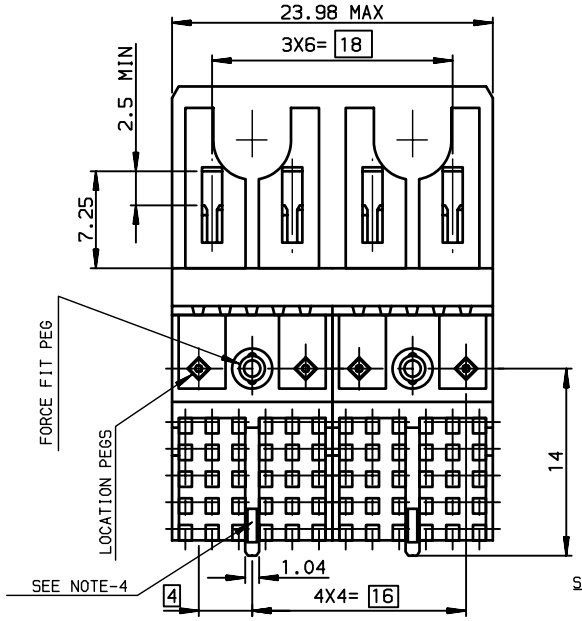

DETAIL-1: PRESS-FIT PIN

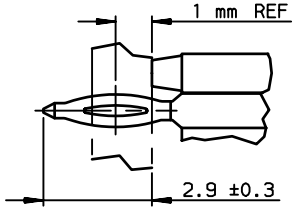

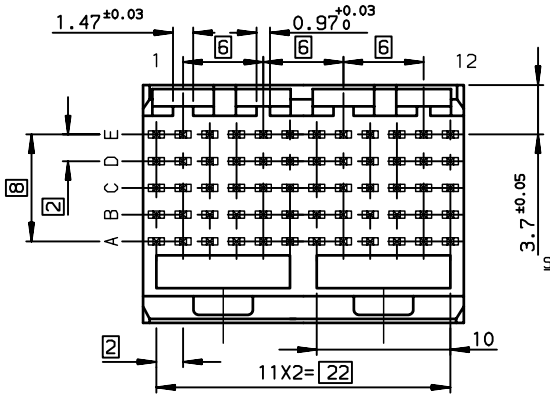

DETAIL OF FORCE-FIT PEGS

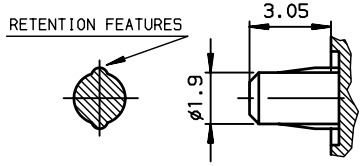

LAYOUT FOR P.C.B
(PER 12mm LENGTH)

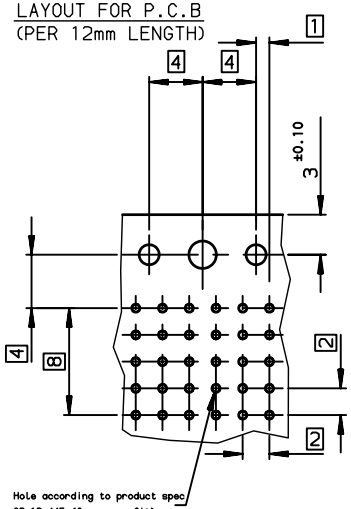

NOTE-2: FLAT ROCK INSERTION TOOLING, ON ALL THIS SURFACE
NOTE-3: EYE OF THE NEEDLE PRESS FIT PIN TYPE
NOTE-4: REAR CENTRAL SUPPORT FOR BETTER ASSY ON PCB
NOTE-5: IF SUFFIX "P" IS ADDED IN P/N PACKAGING IS IN TRAYS
BUT CONNECTOR MARKING IS WITHOUT "P"
EXAMPLE: HM1XXXXXXXXXH6P, MARKED HM1XXXXXXXXXH6

TIN LEAD PART NUMBER

Part Number: HM1L52xDP000Hz6

MATING LENGTH DIM-P / REPLACE 'x' BY:

	ROW-A	ROW-B	ROW-C	ROW-D	ROW-E
A =	5.00	5.00	5.00	5.00	5.00
L =	5.75	5.75	5.75	5.75	5.75
D =	6.50	6.50	6.50	6.50	6.50
B =	6.50	5.00	5.00	5.00	5.00
C =	6.50	5.75	5.75	6.50	5.75
M =	7.25	7.25	7.25	7.25	7.25
N =	8.00	8.00	8.00	8.00	8.00

STD

LEAD FREE PART NUMBER

Part Number: HM1L52xDP000HzLF

MATING LENGTH DIM-P / REPLACE 'x' BY:

	ROW-A	ROW-B	ROW-C	ROW-D	ROW-E
A =	5.00	5.00	5.00	5.00	5.00
L =	5.75	5.75	5.75	5.75	5.75
D =	6.50	6.50	6.50	6.50	6.50
B =	6.50	5.00	5.00	5.00	5.00
C =	6.50	5.75	5.75	6.50	5.75
M =	7.25	7.25	7.25	7.25	7.25
N =	8.00	8.00	8.00	8.00	8.00

STD

GENERAL CHARACTERISTICS AND ROHS INFORMATIONS:
SEE PRODUCT SPECIFICATION GS-12-445

rev	ecn no	dr	date
F	-	GOI	2004/10/14
G	LS05-004	MLE	2005/02/17
H	LS06-0095	LGO	2006/07/10
J	LS07-0184	MLE	2007/07/24
-	-	-	-
-	-	-	-
-	-	-	-

European Views

www.fciconnect.com

surface ISO 1302 | tolerance std ISO 406 ISO 1101 | projection | mm

TOLERANCES UNLESS OTHERWISE SPECIFIED

Dr	ETIEMBRE	19/06/28	ANGULAR	LINEAR	0.X	±0.1
Eng	LENOIR	1997/01/23			0.XX	±0.1
Chr	LEGARE	1997/01/23	0.XX° ±2°		0.XXX	±0.1
Appr	LEGARE	1997/01/23	Product family			METRAL

size A3 | Scale 2.5 | ECN LS07-0184 | Spec ref -

title: METRAL RA HEADER 5 ROW
STANDARD PRESS-FIT 60 WAY

dwg no C-8626-0236 | Rev. J

catalog no - | CUSTOMER | sheet 1 of 1

REV F - 2006-04-17

Copyright FCI.