PART NAME	NEMA 4 DIE CAST ALUMINUM ENCLOSURE	PART No.	AN-1301, AN-1301-G, AN-2801 & AN-2801-B	REV. DATE	12-18-08

MATERIAL: ALUMINUM ALLOY #ADC-12

FINISH: NATURAL (NO SUFFIX)
GRAY (SUFFIX -G)
SMOOTH BLACK (SUFFIX -B)

NOTES:
1) FOUR (4) M4 x 20mm (0.787") LG. SCREWS SUPPLIED FOR ASSEMBLY OF COVER TO BODY.
2) ALL HOLE DIAMETERS HAVE ±0.005 TOLERANCE ALL OTHER DIMENSIONS HAVE ±0.015 TOLERANCE

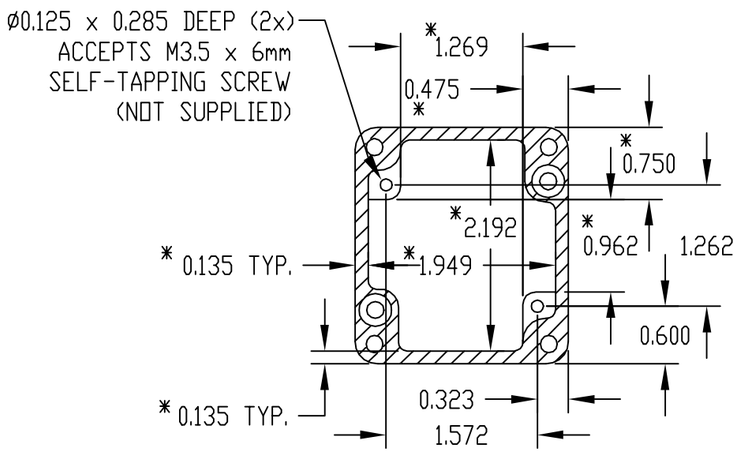

SECTION "C-C"
* DIMENSIONS ARE AT BOTTOM OF ENCLOSURE

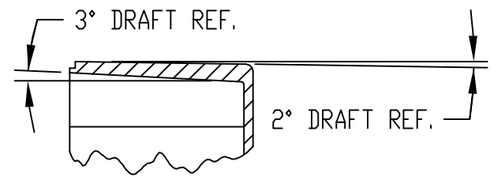

SECTION "B-B"

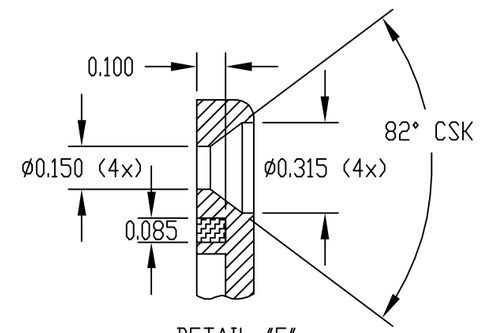

DETAIL "E"

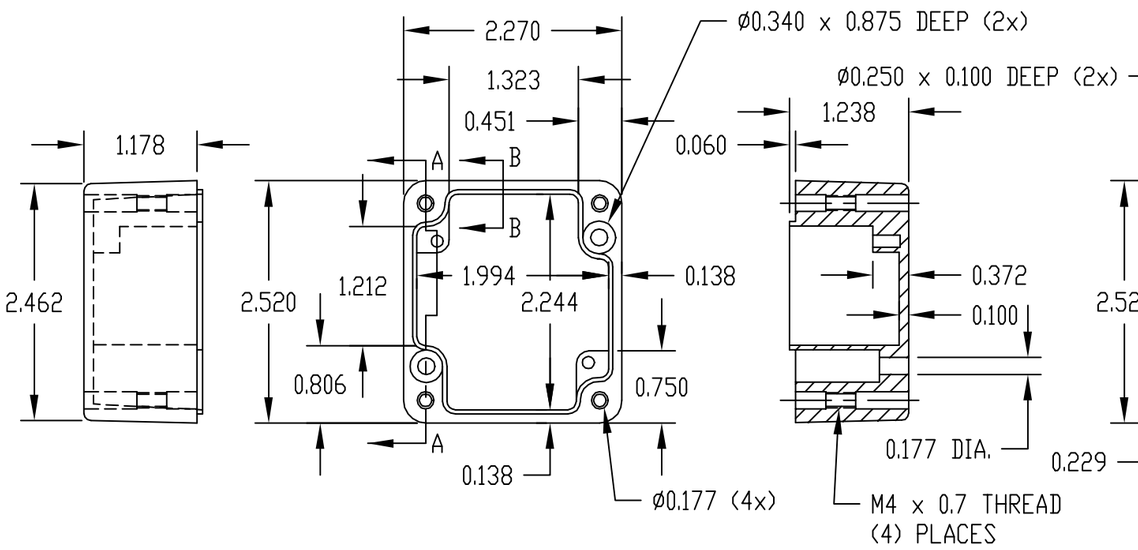

SECTION "A-A"

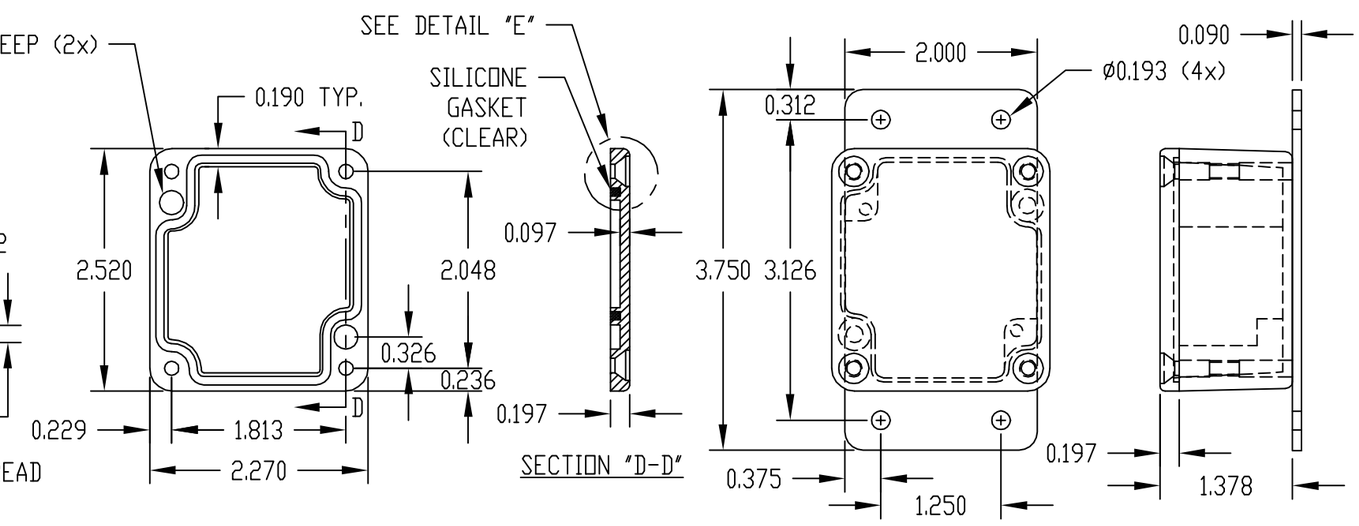

SECTION "D-D"

COVER

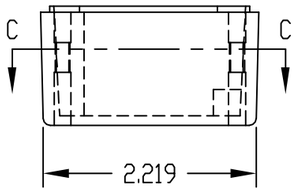

BODY

PART NO. AN-2801 & AN-2801-B ARE SUPPLIED WITH A WELDED ON MOUNTING BRACKET ONLY.