PART NAME	NEMA 4X DIE CAST ALUMINUM ENCLOSURE	PART No.	AN-1316, AN-1316-G, AN-2816 & AN-2816-B	REV. DATE	12-17-08

MATERIAL: ALUMINUM ALLOY #ADC-12

FINISH: NATURAL (NO SUFFIX)
GRAY (SUFFIX -G)
SMOOTH BLACK (SUFFIX -B)

NOTES:
1) FOUR (4) M4 x 25mm (0.975") LG. SCREWS SUPPLIED FOR ASSEMBLY OF COVER TO BODY.
2) ALL HOLE DIAMETERS HAVE ±0.005 TOLERANCE
ALL OTHER DIMENSIONS HAVE ±0.015 TOLERANCE

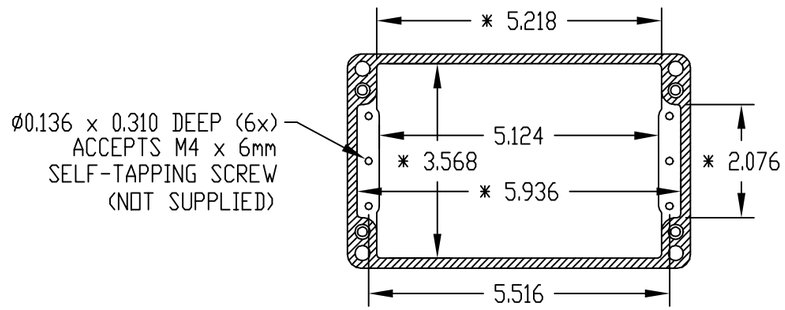

SECTION "B-B"
* DIMENSIONS ARE AT BOTTOM OF ENCLOSURE

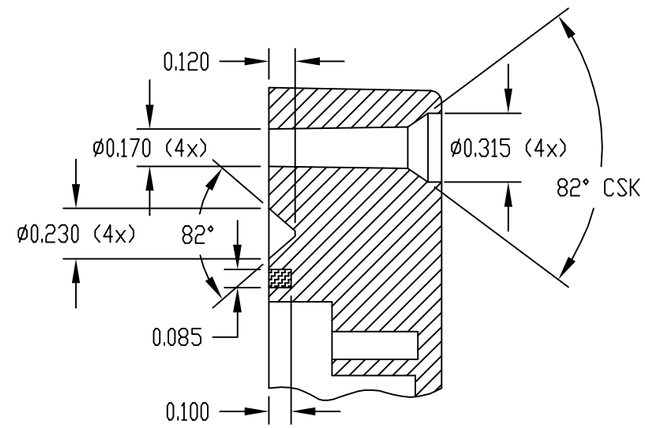

DETAIL "D"

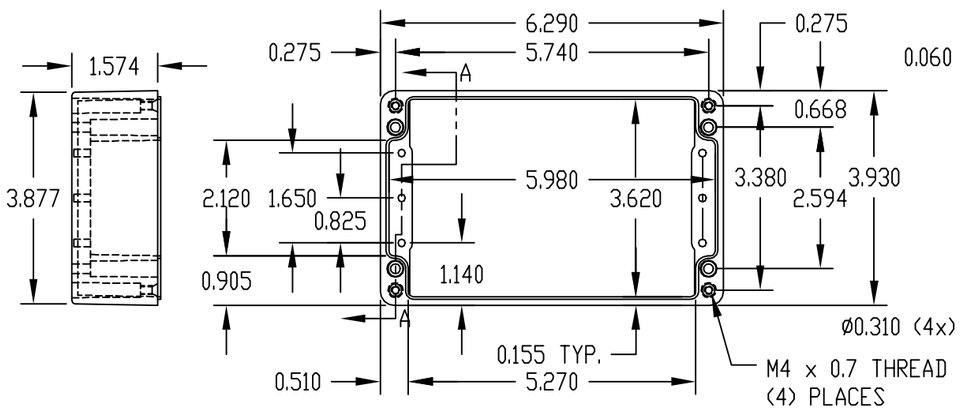

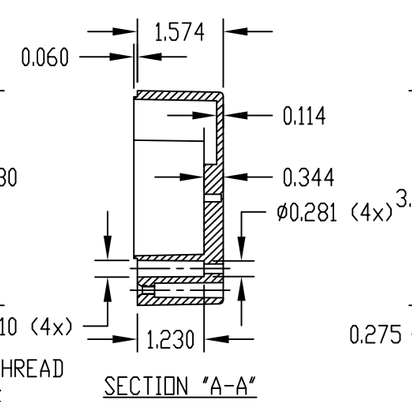

SECTION "A-A"

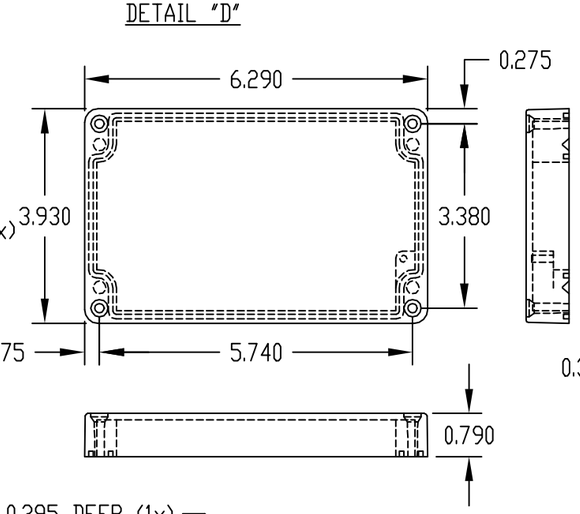

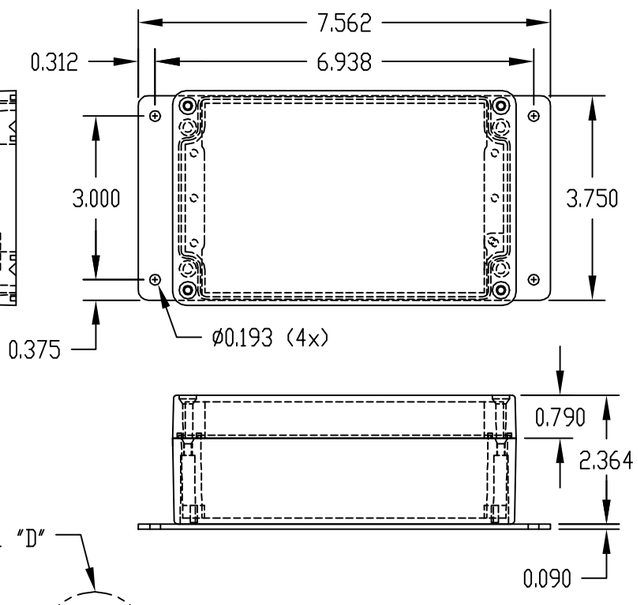

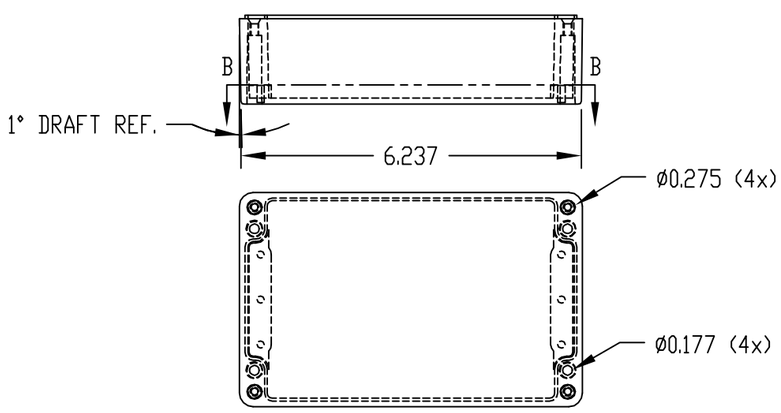

BODY

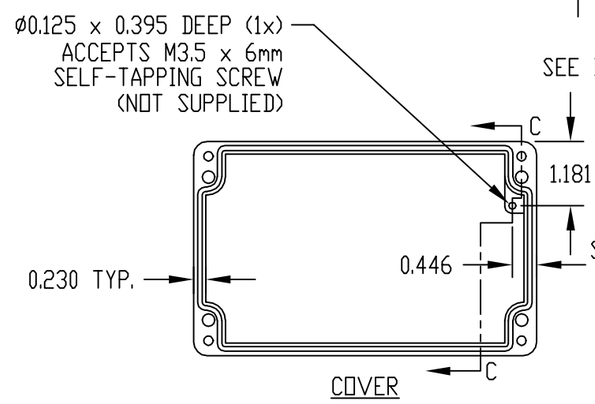

COVER

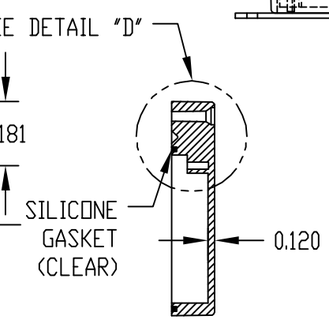

SECTION "C-C"

PART NO. AN-2816 & AN-2816-B ARE SUPPLIED WITH A WELDED ON MOUNTING BRACKET ONLY.