PART NAME	NEMA 4 DIE CAST ALUMINUM ENCLOSURE	PART No.	AN-1310, AN-1310-G, AN-2810 & AN-2810-B	REV. DATE	12-17-08

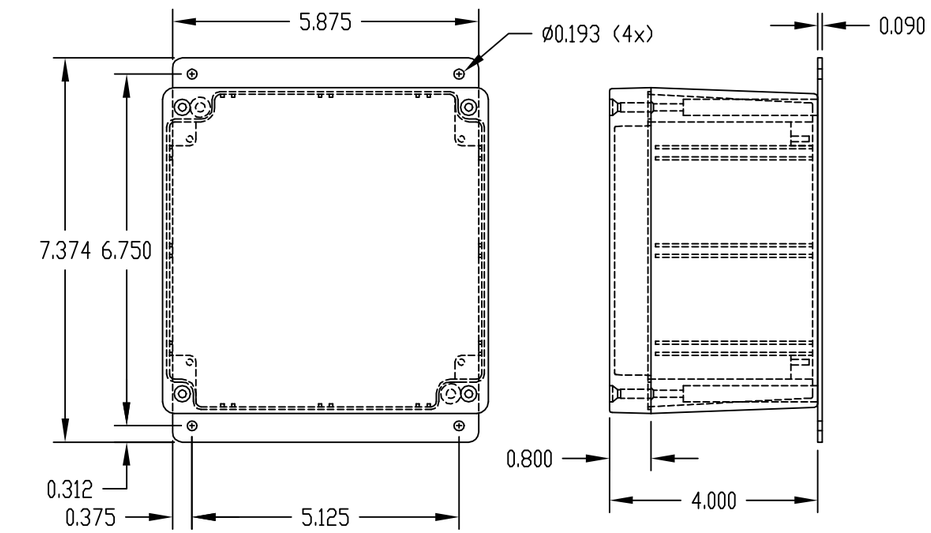

MATERIAL: ALUMINUM ALLOY #ADC-12

FINISH: NATURAL (NO SUFFIX)
GRAY (SUFFIX -G)
SMOOTH BLACK (SUFFIX -B)

NOTES:
1) FOUR (4) M4 x 32mm (1.260") LG. SCREWS SUPPLIED FOR ASSEMBLY OF COVER TO BODY.
2) ALL HOLE DIAMETERS HAVE ±0.005 TOLERANCE ALL OTHER DIMENSIONS HAVE ±0.015 TOLERANCE

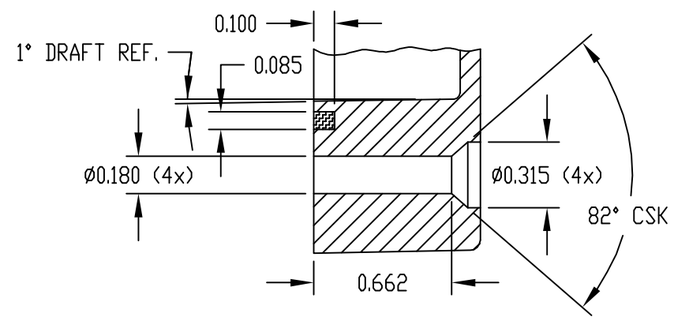

DETAIL "D"

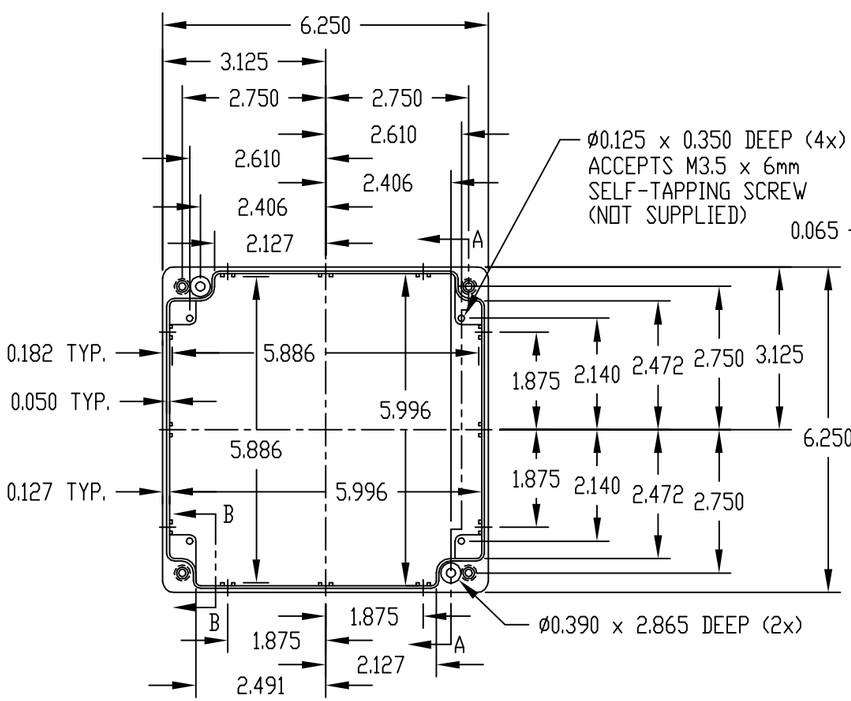

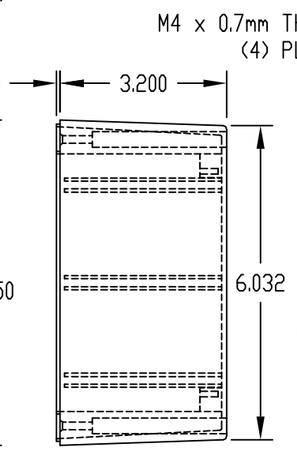

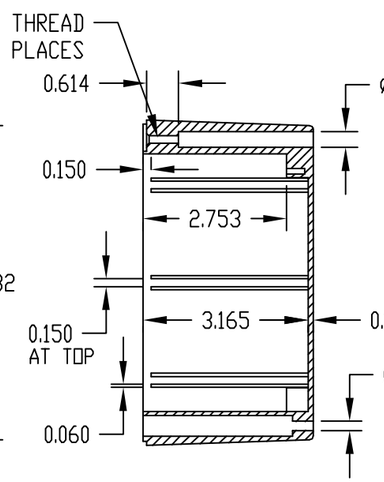

SECTION "A-A"

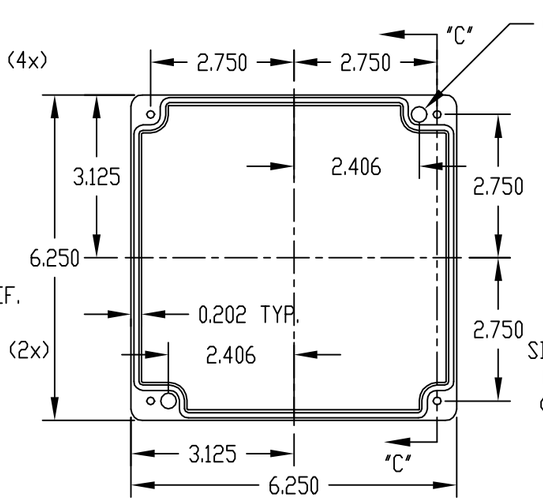

COVER

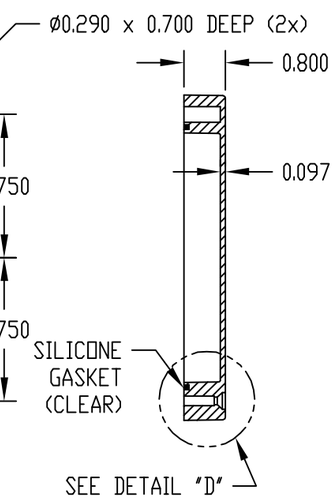

SECTION "C-C"

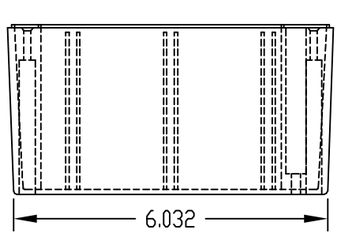

BODY

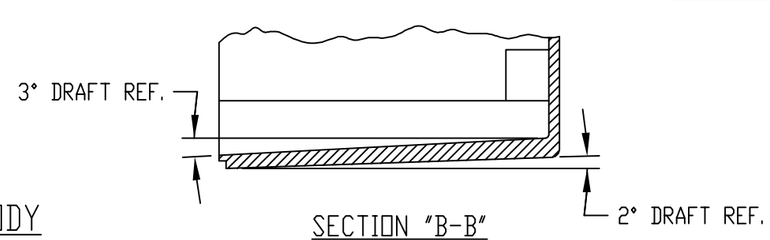

SECTION "B-B"

PART NO. AN-2810 & AN-2810-B ARE SUPPLIED WITH A WELDED ON MOUNTING BRACKET ONLY.