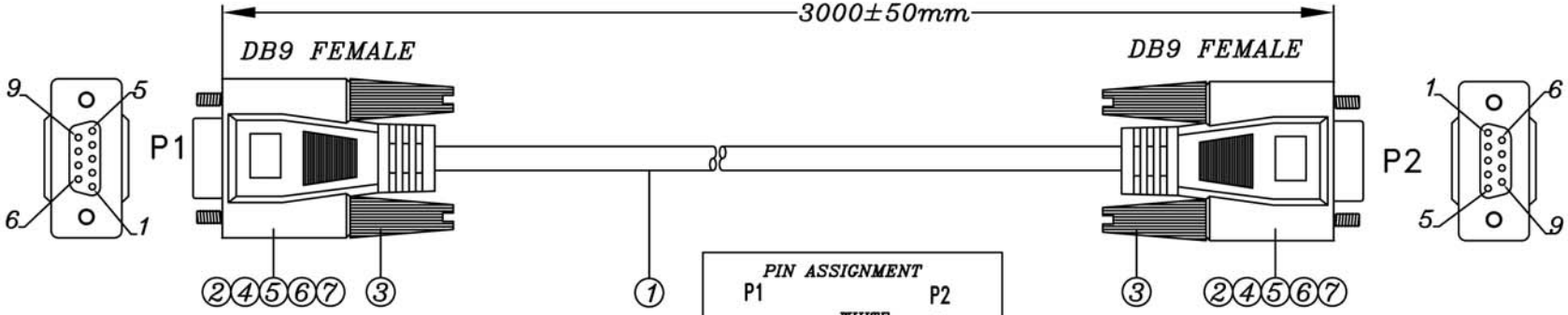

PIN ASSIGNMENT

P1		P2
1	WHITE	1
2	GRAY	2
3	YELLOW	3
4	PINK	4
5	ORANGE	5
6	RED	6
7	BROWN	7
8	GREEN	8
9	BLUE	9
SHIELD	D	SHIELD

Electrical test:
1. 100% short, open, miswire test
2. Conduct resistance: 2 Ohm(max)
3. Insulation resistance: 5Mohm(min)
4. dielectric test: DC 300V

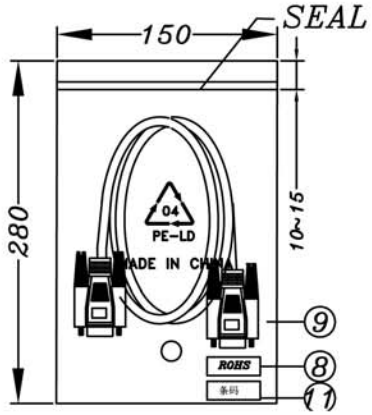

ROHS

NO.	PART NO.	DESCRIPTION	VENDER	QTY	UNIT/REF
16		PACKING TAPE COLOR YELLOW L=2800mm			1/100
15		TRANSPARENT ADHESIVE TAPE L=3000mm			1/100
14		CARTON 40*30*25CM K=A GLUE TYPE			1/100
13		WATERPROOF BAG (15+16)*34" T=0.04mm			1/100
12		CODE39:45*20MM内容详见订单			2/100
11		条码：45*20MM内容：4016032062929			112/100
10		PE BAG 360*380*0.05mm PRINT BLACK"MADE IN CHINA"			1/10
9		PE BAG 150*280*0.05mm PRINT BLACK"MADE IN CHINA"		1	PCS
8		ROHS LABEL 35*22mm WHITE/BOTTOM TEXT/BLACK			112/100
7		OUTER MODEL PVC 45P COLOR BEIGE(CS-B02)		40	g
6		INNER MODEL PVC 65P COLOR BLACK		10	g
5		ROUND TIN OD1.0mm		0.54	g
4		HEAT SHINK TUBE OD1.5mm		2	15mm
3		THUMB SCERW #4-40UNC E32 BEIGE(CS-B02)		4	PCS
2		DB9/F SOLDER TYPE PLASTIC BLUE		2	P1,P2
1		NOUL 28AWC*9C+D+AL OD5.0mm COLOR BEIGE(CS-B02)	01	1	3000mm

REV	REV./NO.	DESCRIPTION	DATE

ASSMANN Electronics, Inc.

TITLE: DB9P/F TO DB9P/F CABLE 3000mm

DRAW	Danny	2007/01/30	DWN NO.	REV A
JE				
CONFIRM			CUS. P/N: AK182-3M-R	REV
DIRECTOR				
CONFIRM			CUS.	
MANAGER				
APPROVAL			SHEET 1 TO 1	
SL				