PRODUCT NUMBER
98401-XXX-XXLF

- WHEN REQUIRED, ADD SUFFIX LETTER "LF" INDICATES THE PRODUCT IS RoHS COMPATIBLE, SEE NOTE 7
- TOTAL NB OF POSITIONS, 8 TO 50
- PACKAGING TYPE, NOTE 3
- PLATING

1=0.76µm GOLD/GXT ON CONTACT AREA
3.81µm TIN-LEAD ON TAIL

4=3.81µm TIN-LEAD ON CONTACT AREA
AND ON TAIL

8=0.38µm GOLD/GXT ON CONTACT AREA
3.81µm TIN-LEAD ON TAIL

WHEN "LF" IS REQUIRED, 2µm MIN MATTE TIN OVER 1.27µm MIN NICKEL INSTEAD OF TIN-LEAD

PIN STYLE	MATING	OAH
01	5.84	10.2
02	8.08	12.4
03	13.00	17.4
06	10.50	14.85

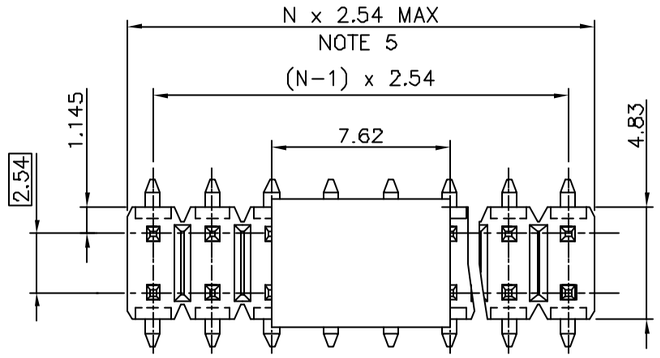

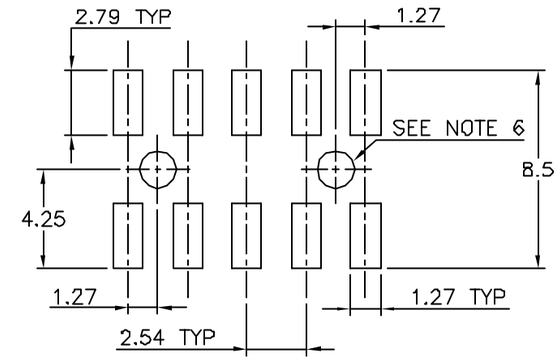

RECOMMENDED PAD LAYOUT

NOTES:

1. HOUSING MAT'L : HIGH TEMPERATURE THERMOPLASTIC. UL94V-0 COLOR: BLACK
2. PIN MATERIAL : PHOSPHOR BRONZE
3. PACKAGING
   - = POLY BAGS
   A = TAPE & REEL + CAP (SEE TA840 FOR PRODUCT AVAILABILIY)
4. 9N MIN RETENTION IN EITHER DIRECTION
5. TO DETERMINE DIMENSIONS :
   N = NUMBER OF POSITIONS PER ROW
   EXAMPLE : 8 POS N x 2.54 = 20.32mm
6. HOLE DIMENSION TO BE ø1.6±0.03 FOR INTERFERENCE FIT APPLICATIONS.
   HOLE DIMENSIONS TO BE ø1.95±0.05 FOR LOCATION APPLICATION WITH AUTOMATIC PICK AND PLACE MACHINES.
7. RoHS COMPATIBLE PRODUCT SPECIFICATIONS
   a - PLATING:
   - "LF" MEANS THE PRODUCT IS LEAD-FREE, 2µm MINIMUM MATTE TIN OVER 1.27µm MINIMUM NICKEL UNDERPLATE.
   b - MANUFACTURING PROCESS COMPATIBILITY
   - THE HOUSING WILL WITHSTAND EXPOSURE TO 260°C PEAK TEMPERATURE FOR 30 SECONDES IN A CONVECTION, INFRA-RED OR VAPOR PHASE REFLOW OVEN.
   c - LABELING:
   - MEETS PACKAGING SPECS AS PER GS-14-920
   d - LEGAL STATEMENT: SEE GS-22-008

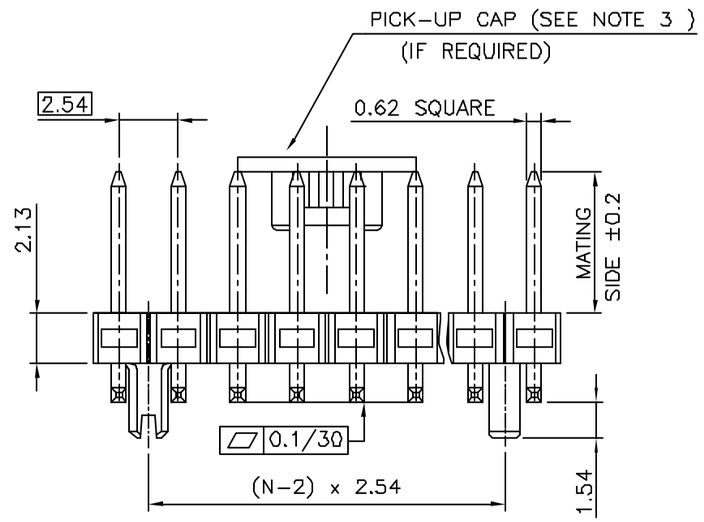

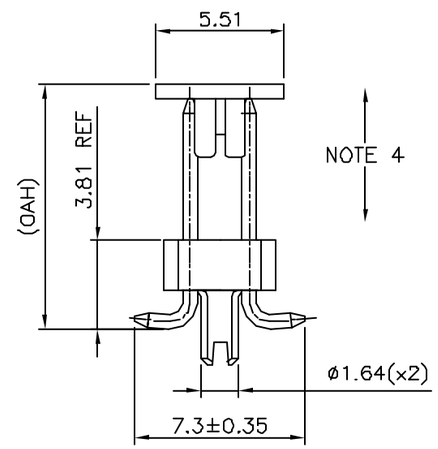

mat'l. code				surface	tolerance	projection	product family	
SEE NOTES				ISO 1302 √	ISO 406 ISO 1101		BERGSTIK	
ltr	ecn no	dr	date	tolerances unless othervise specified			title	
H	F08-0148	JCO	08.05.19	angles	linear: X.X ±0.3	mm	UNSHR.HEADER	
					X.XX ±0.13		DR SMT	
C	F03039	JCO	03.02.18		X.XXX ±0.05	scale 5:1		
D	F04-0362	LMU	04.12.13	dr	D.LE	01.01.24	dwg no	sheet 1 of 1 / size
E	F06-0208	JCO	06.06.22	engr	JM.C	01.01.24	98401	A3
F	F08-0155	J.CO	08.04.05	chr	JM.C	01.01.24		
G	F08-0170	LMU	08.05.16	appd	JF.N	01.01.24	type	CUSTOMER Drawing
sheet index	revision							
	sheet							

form: A3

FCIconnect.com
Copyright FCI

PDM: Rev:H STATUS:Released Printed: Jun 04, 2008