FO-55113-A

HONEYWELL PART NUMBER

91MCE16 SERIES CHART 1

REV	DOCUMENT	CHANGED BY	CHECK
C	0038085	SS 11MAR08	BLR

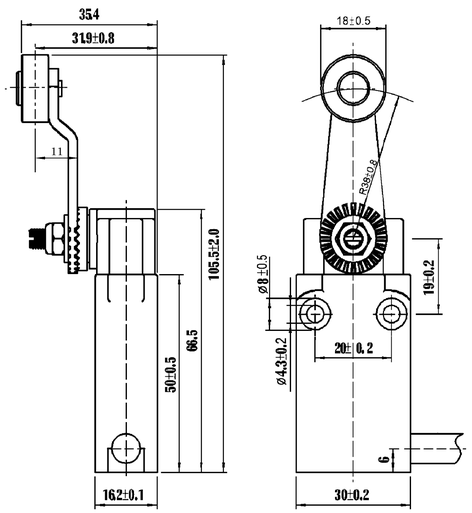

CABLE VERSION
WITH PLASTIC ROLLER

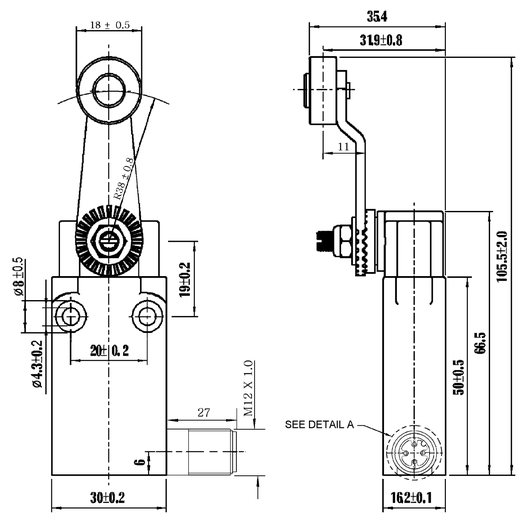

SIDE EXIT CONNECTOR
WITH PLASTIC ROLLER

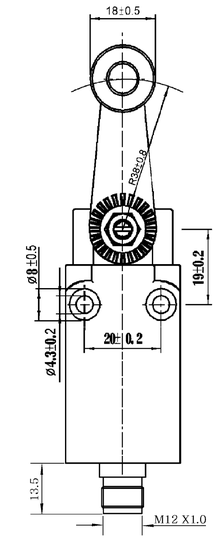

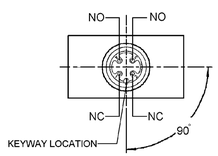

BOTTOM EXIT CONNECTOR
WITH PLASTIC ROLLER

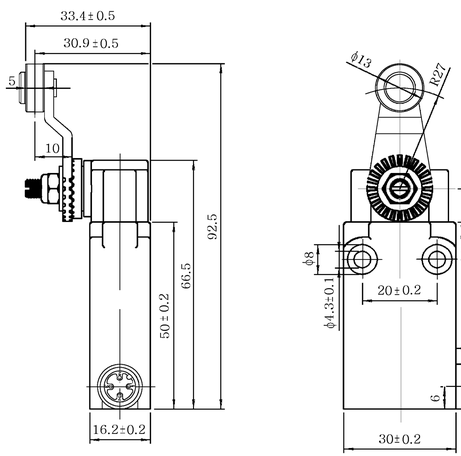

SHORT LEVER VERSION WITH
METAL/ PLASTIC ROLLER

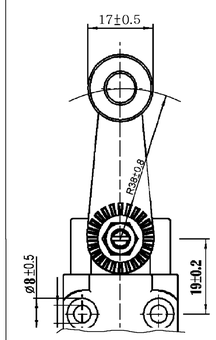

STANDARD LEVER WITH
METAL ROLLER

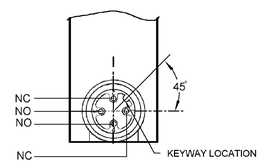

DETAIL A

91MCE16 NOMENCLATURE TREE

91MCE	16	-	S	1	B	P	

CONNECTOR TYPE

	CABLE (NO CONNECTOR)
Q	4- PIN M12 CONNECTOR

LEVER TYPE

	STANDARD LEVER / METAL ROLLER
P	STANDARD LEVER / PLASTIC ROLLER
O	SHORT LEVER / METAL ROLLER
OP	SHORT LEVER / PLASTIC ROLLER

CABLE / CONNECTOR EXIT

B	BOTTOM EXIT
	SIDE EXIT

CABLE LENGTH

1	1 METER CABLE LENGTH
2	2 METER CABLE LENGTH
3	3 METER CABLE LENGTH
5	5 METER CABLE LENGTH
	CONNECTOR VERSION (NO CABLE)

SWITCH TYPE

P	1NO / 1NC DIRECT ACTING, SNAP ACTION
S	1NC / 1NO DIRECT ACTING, BREAK-BEFORE-MAKE

ACTUATORS

16	SIDE ROTARY W/ METAL LEVER

91MCE SERIES -
MINIATURE COMPACT ENCLOSED SWITCHES

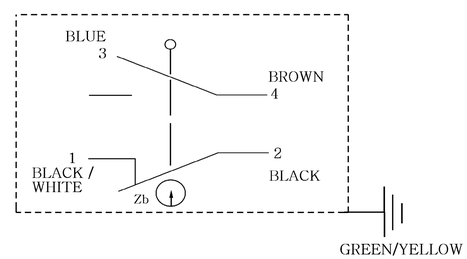

OPERATING CHARACTERISTICS

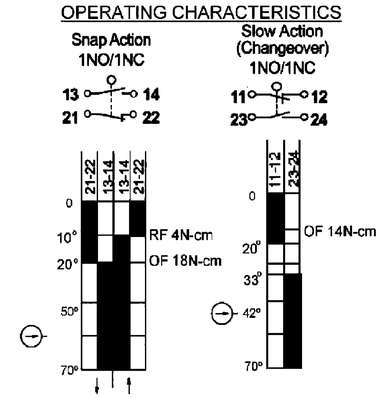

YELLOW/GREEN = GROUND

SPECIFICATIONS

OPERATING SPEED	0.05mm-1m/sec
OPERATING FREQUENCY	MECHANICAL: 120ops/min ELECTRICAL: 30ops/min
INSULATION RESISTANCE	>100MΩ@ 500V DC
CONTACT RESISTANCE	<25mΩ
RATED VOLTAGE	300V AC (EN60947-5-1)
RATED THERMAL CURRENT	PRE-LEADED 10A - 3A CONNECTOR
ELECTRICAL RATING	AC15 A300 DC13 Q300
DIELECTRIC STRENGTH	1000VAC FOR 1 MIN BETWEEN CURRENT CARRYING PARTS 2500VAC FOR 1 MIN BETWEEN NON-CURRENT CARRYING PARTS
SERVICE LIFE	MECHANICALLY 5 X 10^7 (OPERATIONS)
OPERATING TEMPERATURE	-25~ + 85 C WITHOUT FORMATION OF ICE
HUMIDITY	<95%RH
CABLE	5 CORE, 0.75mm^2 (18AWG)
DEGREE OF PROTECTION	IP67

"Q" OPTION
PIN 1 & 2 - NORMALLY CLOSED
PIN 3 & 4 - NORMALLY OPEN

ELECTRICAL RATINGS

IEC 60947-5-1 / EN 90947-5-1				
DESIGNATION & UTILIZATION CATEGORY	RATED OPERATIONAL CURRENT Ie (A) AT RATED OPERATIONAL VOLTAGE Ue		VA RATING	
	120V	240V	Make	Break
AC15 A300	6	3	7200	720
	125VDC	250VDC		
DC13 Q300	0.55	0.27	69	69

UNLESS OTHERWISE SPECIFIED
TOLERANCES ARE +/- 0.15

APPROVALS

NOTES:
1. DIE CAST HOUSING FINISHED IN BLACK PAINT

DESIGN UNITS: MM
TOLERANCES UNLESS NOTED:

NO PLACE	X	±	0.040
ONE PLACE	.X	±	0.030
TWO PLACE	.XX	±	0.015
THREE PLACE	.XXX	±	0.005
FOUR PLACE	.XXXX	±	0.0005
ANGLES		±	2

THIRD ANGLE PROJECTION

THIS DRAWING COVERS A PROPRIETARY ITEM AND IS THE PROPERTY OF HONEYWELL. THIS DRAWING IS NOT TO BE COPIED OR USED WITHOUT THE PERMISSION OF HONEYWELL.

INTERPRET PER ASME Y14.5M-1994 OTHER HONEYWELL ENGINEERING STANDARDS MAY APPLY

RASTER

DRAWN	BS	02APR07
CHECK	PSR	02APR07

Honeywell

TITLE
COMPACT PRECISION LIMIT SWITCH

SIZE	TYPE	DRAWING NAME	REV
D	I	91MCE16 SERIES CHART 1	C

SCALE NTS

SHEET 1 OF 1