PRODUCT NR.
85968-XYZ
85968-XYZLF

X	PLATING CONTACT AREA:	UNDERPLATING
1	0.8 µm GOLD	1.3 µm Ni MIN.
2	2 µm GOLD	1.3 µm Ni MIN.
3	1.3 µm GOLD	1.3 µm Ni MIN.
9	0.8 µm GXT	1.3 µm Ni MIN.

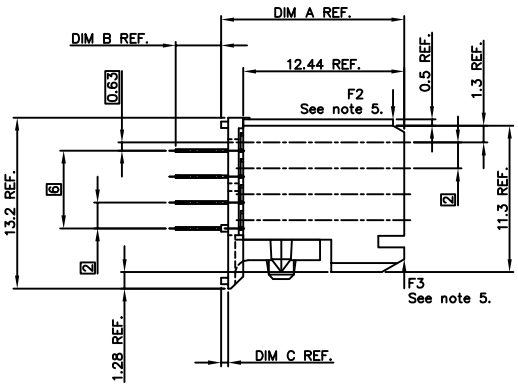

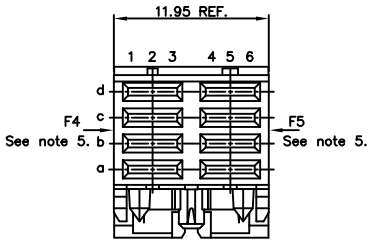

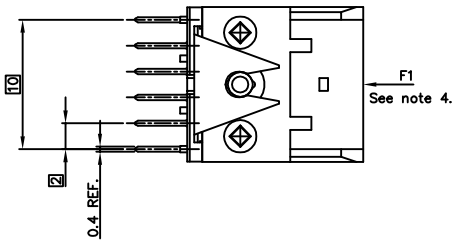

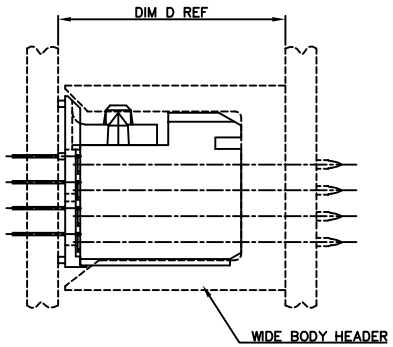

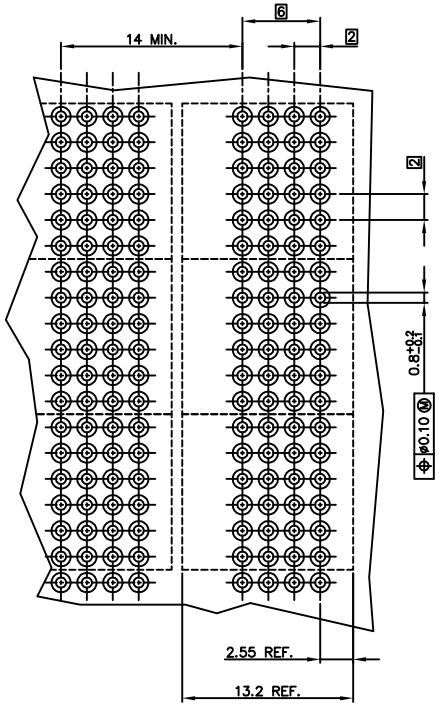

RECOMMENDED HOLE PATTERN,
COMPONENT SIDE.

DASH NR	CONFIGURATION ROW #	COLUMN # 1 2 3	COLUMN # 4 5 6	PCB THICKN.	DIM A	DIM B	DIM C	DIM D
-X01	D	+	+	2.4	14.14	3.50	0.54	17.64
	C	+	+					
-X01LF	B	+	+					
	A	+	+					
-X02	D	+	+	3.2	13.60	4.04	0.00	17.10
	C	+	+					
-X02LF	B	+	+					
	A	+	+					
-X03	D	+	+	2.4	13.60	3.24	0.00	17.10
	C	+	+					
-X03LF	B	+	+					
	A	+	+					
-X04	D	+	+	1.6	13.60	2.39	0.00	17.10
	C	+	+					
-X04LF	B	+	+					
	A	+	+					
-X05	D	+	+	1.6	14.14	2.70	0.54	17.64
	C	+	+					
-X05LF	B	+	+					
	A	+	+					
-X06	D	+	+	1.6	14.64	3.00	0.54	18.14
	C	+	+					
-X06LF	B	+	+					
	A	+	+					
-X07	D	+	+	1.6	15.14	2.50	0.54	18.64
	C	+	+					
-X07LF	B	+	+					
	A	+	+					
	D							
	C							
	B							
	A							

"–" POSITION NOT LOADED
"+" POSITION LOADED

NOTES:

1. BODY MAT'L: LIQUID CRYSTAL POLYMER 30% GLASS FLAME RETARDANT ACC. UL 94-V0
2. TERMINAL MATERIAL: PHOSPHOR BRONZE.
3. PLATING SOLDERTAILS 2-8 µm SnPb 90-97 OR 2-8 µm PURE Sn FOR LF.
4. LOAD IN THIS DIRECTION (E.G. THROUGH CODING) 30 NEWTON MAXIMUM PER CONNECTOR.
5. LOAD IN THIS DIRECTION 15 NEWTON MAXIMUM PER CONNECTOR.
6. TO ENSURE PROPER ALIGNMENT OF MULTIPLE MODULES ON A BOARD THE USE OF A FIXTURE IS RECOMMENDED.
7. PRODUCT MARKING: PARTNUMBER & BATCH I.D.
8. THIS PRODUCT MEETS EUROPEAN UNION DIRECTIVES AND OTHER COUNTRY REGULATIONS AS DESCRIBED IN GS-22-008
9. THE HOUSING WILL WITHSTAND EXPOSURE TO 260 DEGREE PEAK TEMPERATURE FOR 10 SECONDS IN A WAVE SOLDER APPLICATION.

mat'l. code				tolerances unless otherwise specified				CUSTOMER COPY	FCI ELECTRONICS www.fciconnect.com
Ltr	ecn no	dr	date						
A	H60221	MME	960418	Linear				projection	title STR SIGN RCP STB + WAFER 12mm
B	H60319	MME	960515						
C	H70484	BKU	970730	angles					
D	H80393	PHE	980618	dr	M. MEIJER	960416		mm	product family METRAL (tm) code 213
E	0005-0076	CLU	050412	engr	M. MEIJER	960416			
F	0005-0092	CLU	051018	chr	P. SCHALK	960416		scale 5:1	size A1 dwg no 85968 sheet 1 of 1
G	0005-0171	TER	9/10/08	APPR	P. SCHALK	960416			
sheet index	revision sheet	G 1							

PDM: Rev:G STATUS: Released Printed: Nov 09, 2008