MATERIAL NO	ENGINEERING NO	WIRE AWG
847290001	84729-0001	28
847290002	84729-0002	20

B

NOTES:
1. MATERIAL: SEE TABLE
2. FINISHES: SEE TABLE
3. MATES WITH: INDUSTRY STD.BAYONET LOCKING USB TYPE A
4. MAX PANEL THICKNESS .10

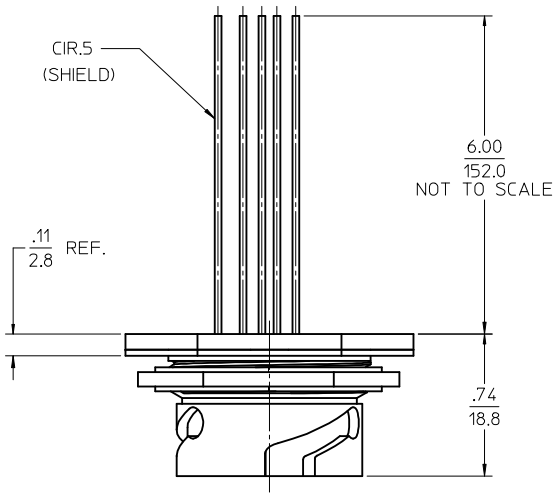

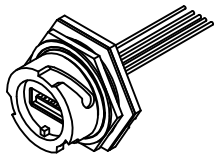

AUX.VIEW Y
SCALE: 1:1

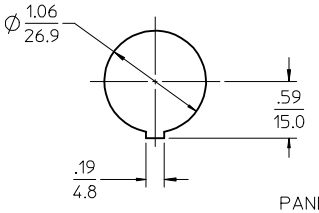

PANEL CUTOUT
SCALE: 1:1

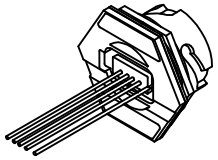

AUX.VIEW X
SCALE: 1:1

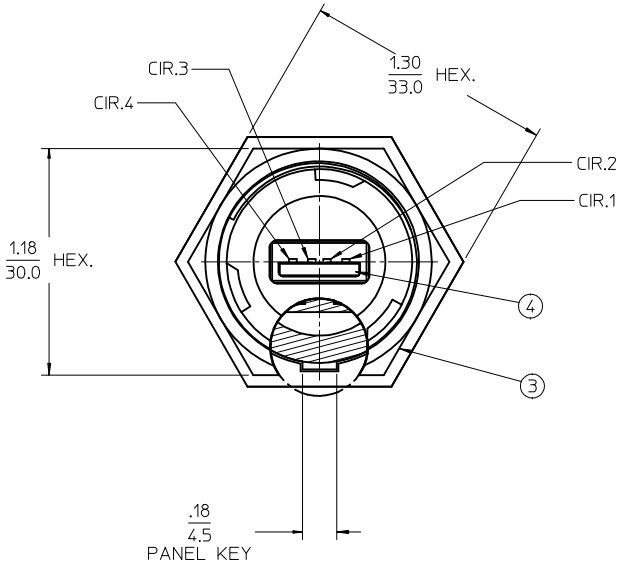

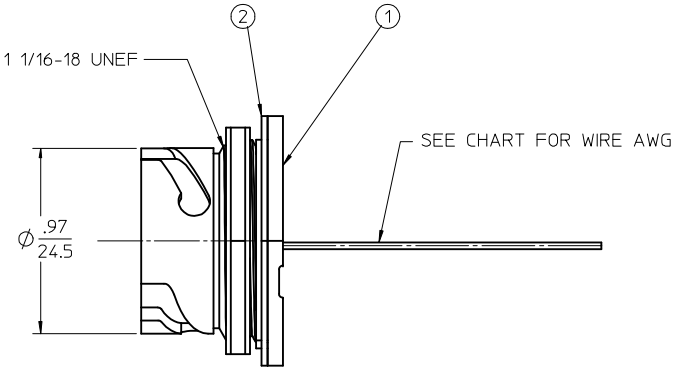

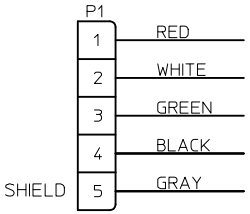

WIRING DIAGRAM

ITEM	QTY.	DESCRIPTION	MATERIAL	FINISH
4	1	USB RECEPTACLE, WITH WIRES	VENDOR SPEC.	NI PLATED CONTACTS
3	1	LOCK-NUT	PA	BLACK
2	1	GASKET SEAL	NEOPRENE	BLACK
1	1	USB RECEPTACLE, PANEL MOUNT	PBT	BLACK

ADD PART NO
EC NO: WNA2009-0195 2008/09/23
DRWN:BRUPERT
CHKD: JMURPHY 2008/10/13
APPR: JFMURPHY
DESCRIPTION
B
REV

QUALITY SYMBOLS
▼=0
▽C=0

GENERAL TOLERANCES (UNLESS SPECIFIED)

	mm	INCH
4 PLACES	± ---	± ---
3 PLACES	± ---	± .005
2 PLACES	± 0.13	± .01
1 PLACE	± 0.25	± ---
ANGULAR ±1/2°		

DRAFT WHERE APPLICABLE MUST REMAIN WITHIN DIMENSIONS

DIMENSION STYLE: IN/MM
SCALE: 2:1
DESIGN UNITS: INCH
THIRD ANGLE PROJECTION

DRAWN BY: R.STONE DATE: 05-12-06
CHECKED BY: R.DEROSS DATE: 06-01-05
APPROVED BY: R.DEROSS DATE: 06-01-05

TITLE: USB-A RECEPTACLE WITH WIRES

molex MOLEX INCORPORATED

MATERIAL NO. 847290001
DOCUMENT NO. SD-84729-005
SHEET NO. 1 OF 1
SIZE C

THIS DRAWING CONTAINS INFORMATION THAT IS PROPRIETARY TO MOLEX INCORPORATED AND SHOULD NOT BE USED WITHOUT WRITTEN PERMISSION