SOLDER SUFFIX	CUSTOMER TERMINAL	RoHS	LEAD(Pb)-FREE
LF3	Sn100%	Yes	Yes

WÜRTH ELEKTRONIK

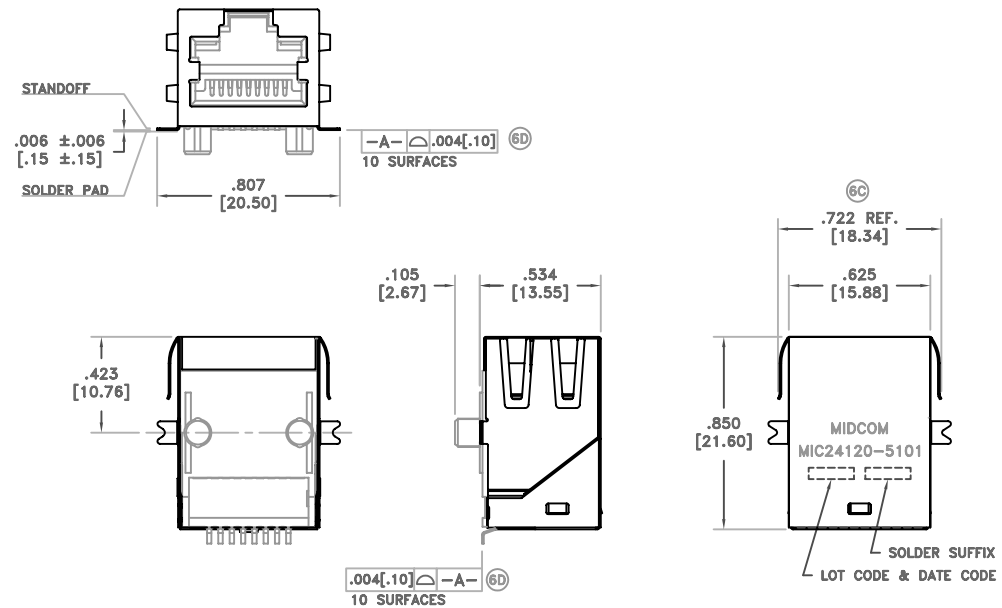

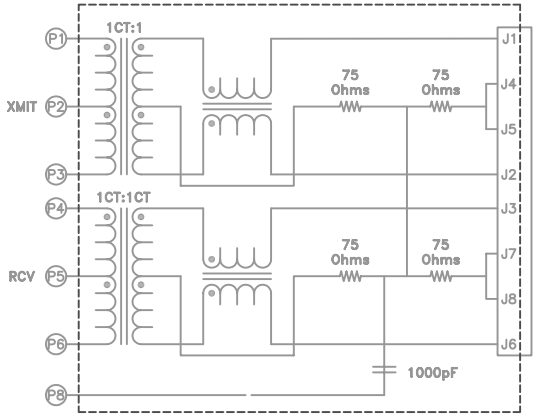

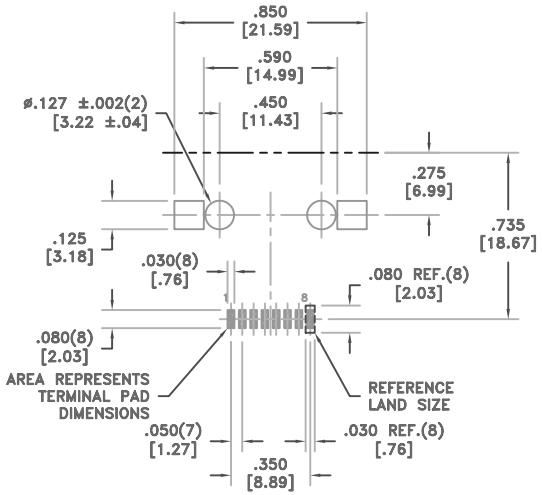

CUSTOMER TO DETERMINE LAND LAYOUT

ELECTRICAL SPECIFICATIONS @ 25°C unless otherwise noted:

INDUCTANCE:	350uH min., 100kHz, 100mV, 8mADC, J1-J2; J3-J6, Lp.
DIELECTRIC RATING:	1500Vrms for 1 minute between P1-J1(tie P1+P4).
TURNS RATIO/POLARITY:	(P1-P3):(J1-J2) = 1:1, ±2%. (P4-P6):(J3-J6) = 1:1, ±2%.
INSERTION LOSS:	-1.0dB max., 1MHz - 100MHz.
RETURN LOSS:	-18dB min., 1M - 30MHz. -16dB min., 30M - 45MHz. -14dB min., 45M - 60MHz. -12dB min., 60M - 80MHz.
CROSSTALK:	-35dB min., 1MHz - 100MHz.
COMMON MODE REJECTION:	-35dB min., 1MHz - 100MHz.

OPERATING TEMPERATURE RANGE: 0°C to +70°C.

PACKAGING TABLE		
X	PACKAGE	6E
R	TAPE & REEL	AGENCY NUMBER
W	TRAY	UL 60950-1 E205930

Midcom, Inc.
Watertown, SD USA
Toll Free: 800-643-2661
Fax: 605-886-4486

Unless otherwise specified:
Tolerances: Fractions: ±1/64 6D
Angles: ±1° Decimals: ±.010 [.25]
This drawing is dual dimensioned. Dimensions in brackets are in millimeters.

DRAWING TITLE
TRANSFORMER
749 801 100 2

Midcom

REVISIONS: SEE SHEET 1

DRAWING NO. MIC24120-5101X-LF3
REV. 6E 8/06
SCALE ---
SHEET 2 OF 7