DRAWING MADE IN THIRD ANGLE PROJECTION

THIS DRAWING IS UNPUBLISHED. RELEASED FOR PUBLICATION ,19 .
© COPYRIGHT 19 BY AMP INCORPORATED. ALL INTERNATIONAL RIGHTS RESERVED.

LOC	DIST
GP	00

P	F	ZONE	LTR	DESCRIPTION	DATE	APPD
			H	REV PER EC 0U1D-0220-00	10/08/01	JR

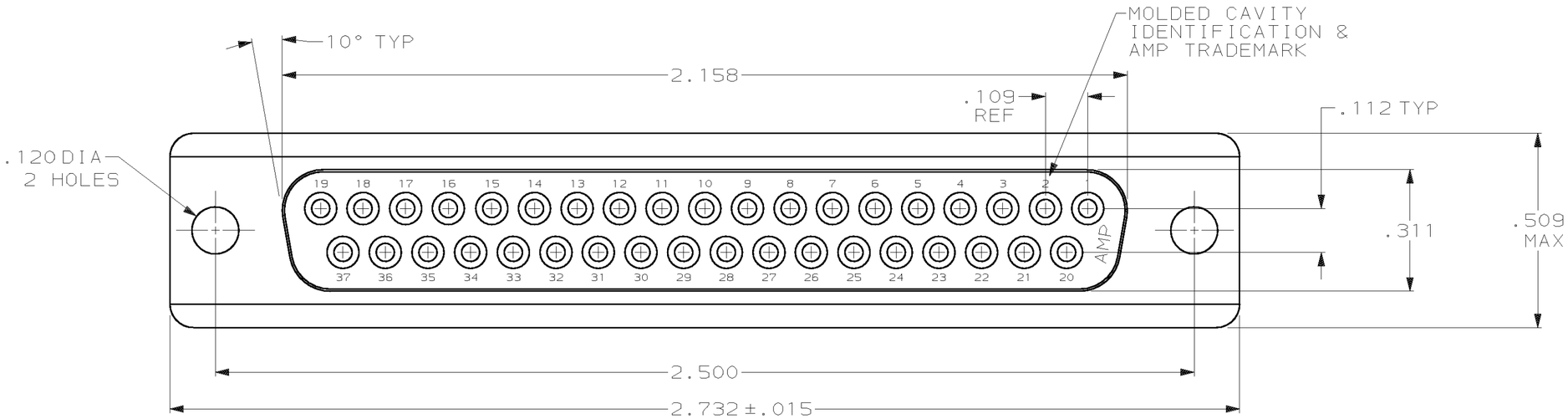

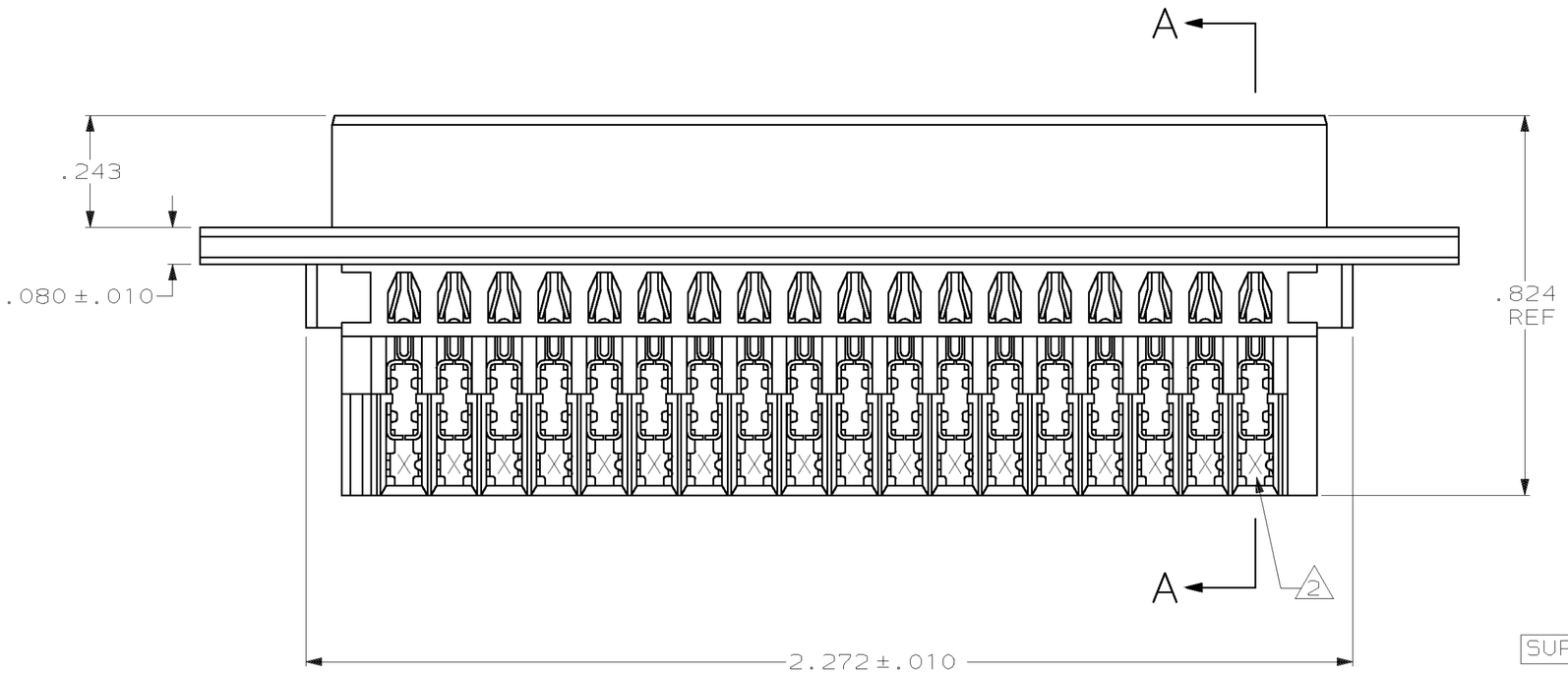

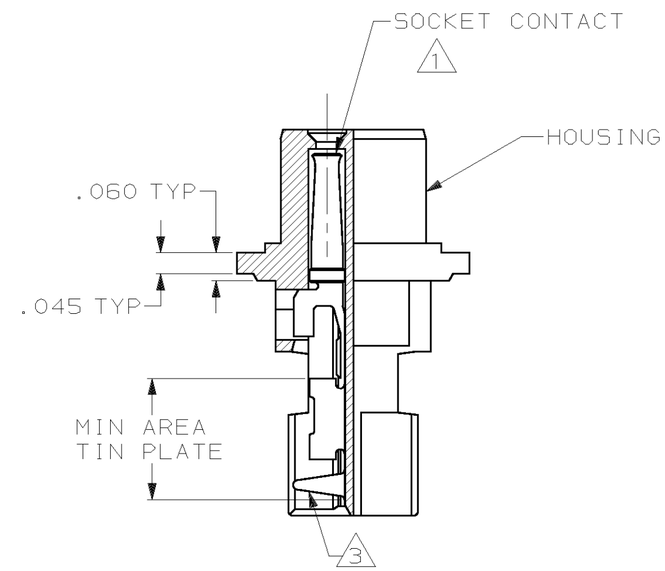

SECTION A-A

OBSOLETE	5	3	#20-22	745213-6
SUPD BY 745213-2		2	#22-26	745213-5
OBSOLETE		1	#26-30	745213-4
OBSOLETE	4	3	#20-22	745213-3
		2	#22-26	745213-2
OBSOLETE		1	#26-30	745213-1
	FINISH	2	AWG WIRE RANGE	PART NUMBER

1. HOUSING FULLY LOADED WITH CONTACTS.
2. NUMBER ON CONTACT INDICATES WIRE RANGE.
3. CONTACT INSULATION RANGE: .060 MAXIMUM O.D.
4. CONTACTS PLATED .000030 GOLD ON MATING END FOR .100 MIN LENGTH. .000100-.000200 THICK BRIGHT TIN OR BRIGHT TIN-LEAD IN AREA SHOWN. .000050 THICK NICKEL UNDERPLATE ON ENTIRE CONTACT.
5. CONTACTS PLATED WITH GOLD FLASH ON MATING END FOR .100 MIN LENGTH. .000100-.000200 THICK BRIGHT TIN OR BRIGHT TIN-LEAD IN AREA SHOWN. .000030 THICK NICKEL UNDERPLATE ON ENTIRE CONTACT.

DO NOT SCALE PRINT.
UNLESS SPECIFIED
DIMENSIONS IN INCHES
TOLERANCES ON :
2 PLC DEC ± -
3 PLC DEC ± .005
ANGLES ± 2°

MATERIAL HOUSING:
BLACK THERMOPLASTIC
94V-0 RATED
CONTACTS:PHOSPHOR BRONZE

FINISH
SEE TABLE

DR 4-2-90 J GALLUCCI BG
CHK 6-21-90 W.LENKER
APPD 6-22-90 J.WESTMAN
APPD 6-22-90 J.ASSINI
PRODUCT SPEC 108-40011
APPLICATION SPEC 114-40002
WEIGHT _

AMP INCORPORATED
Harrisburg, Pa. 17105

NAME
RECEPTACLE ASSEMBLY, SIZE 4, 37 POSITION, AMPLIMITE™

SIZE C | FSCM NO 00779 | DRAWING NO 745213
SCALE 4:1 | SHEET 1 OF 1

745213

AMP 1471-6 REV 3-89

CUSTOMER DRAWING