MATERIALS AND FINISHES

BODY, JAM NUT BRASS
PLATED SEE TABLE

CENTER CONTACT BERYLLIUM COPPER
PLATED GOLD

INSULATOR TEFLON

LOCKWASHER PHOSPHOR BRONZE
PLATING SEE TABLE

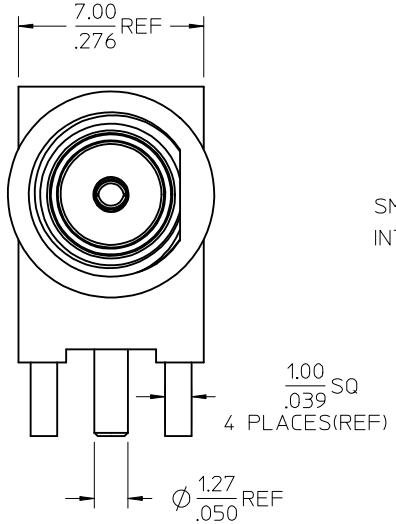

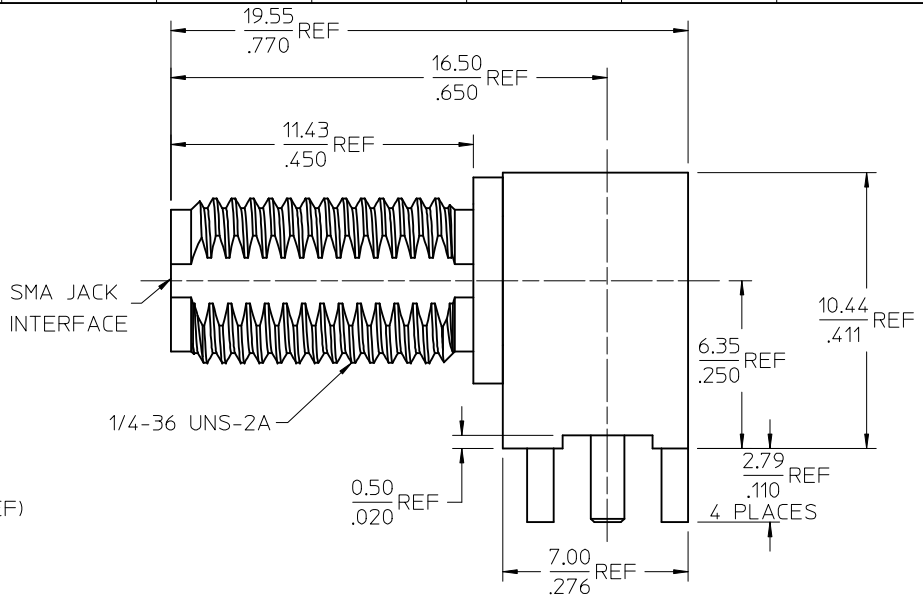

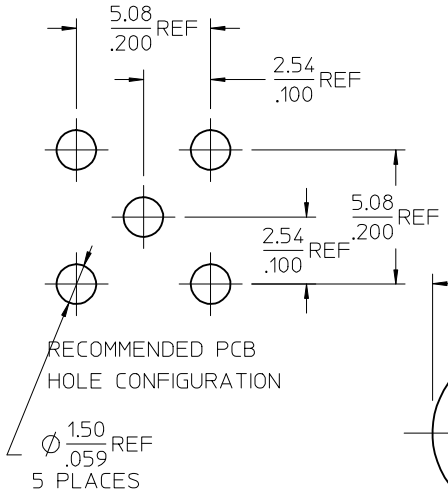

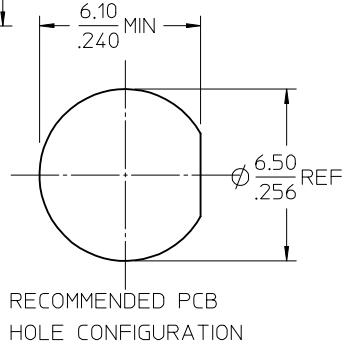

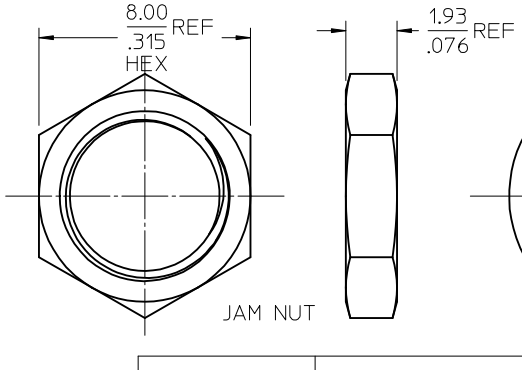

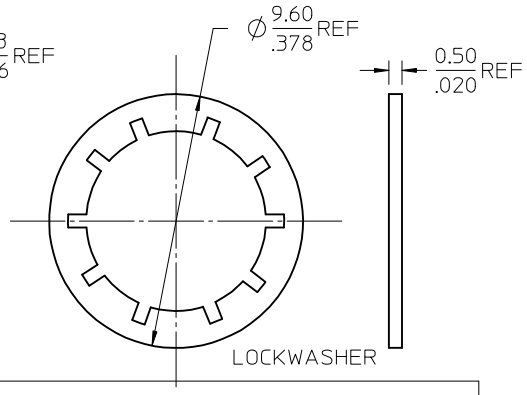

73251-2204	GOLD FLASH AND BY TRAY (54 CAV.)W/O WASHER AND NUT
73251-2203	GOLD FLASH AND BY TRAY (54 CAV.)
73251-2202	73251-2201 BY TRAY (20 CAV.)
73251-2201	GOLD
73251-2200	NICKEL
PART NO.	PALTING (BODY, NUT, LOCKWASHER)

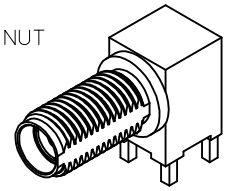

PS-73598-0460	ELECTRO/MECH PERFORM.
SPECIFICATION	DESCRIPTION

ADDED P/N -2204
EC NO: URF2009-0337 2008/12/19
DRWN:ELI IN 2008/12/19
CH'KD: 2008/12/23
APPR:MHUANG
DESCRIPTION
D4
REV

QUALITY SYMBOLS
▼=0
▽=0

GENERAL TOLERANCES (UNLESS SPECIFIED)

	mm	INCH
4 PLACES	±---	±---
3 PLACES	±---	±---
2 PLACES	±---	±---
1 PLACE	±---	±---
ANGULAR ± 2 °		

DRAFT WHERE APPLICABLE MUST REMAIN WITHIN DIMENSIONS

DIMENSION STYLE: MM/IN
SCALE
DESIGN UNITS: METRIC
THIRD ANGLE PROJECTION

DRAWN BY: CLAIRE LEE DATE: 2003/08/29
CHECKED BY DATE
APPROVED BY DATE

TITLE: SMA JACK, R/A PCB
SMA-J/RA/PCB

molex MOLEX INCORPORATED

MATERIAL NO.: SEE TABLE
DOCUMENT NO.: SD-73251-220
SHEET NO.: 1 OF 1
SIZE: C

THIS DRAWING CONTAINS INFORMATION THAT IS PROPRIETARY TO MOLEX INCORPORATED AND SHOULD NOT BE USED WITHOUT WRITTEN PERMISSION