MATERIALS AND FINISHES

BODY, COUPLING NUT BRASS
PLATED GOLD

CENTER CONTACT BRASS
PLATED GOLD

INSULATOR TEFLON

SHRINK TUBE VERSAFIT

C'RING BERYLLIUM COPPER

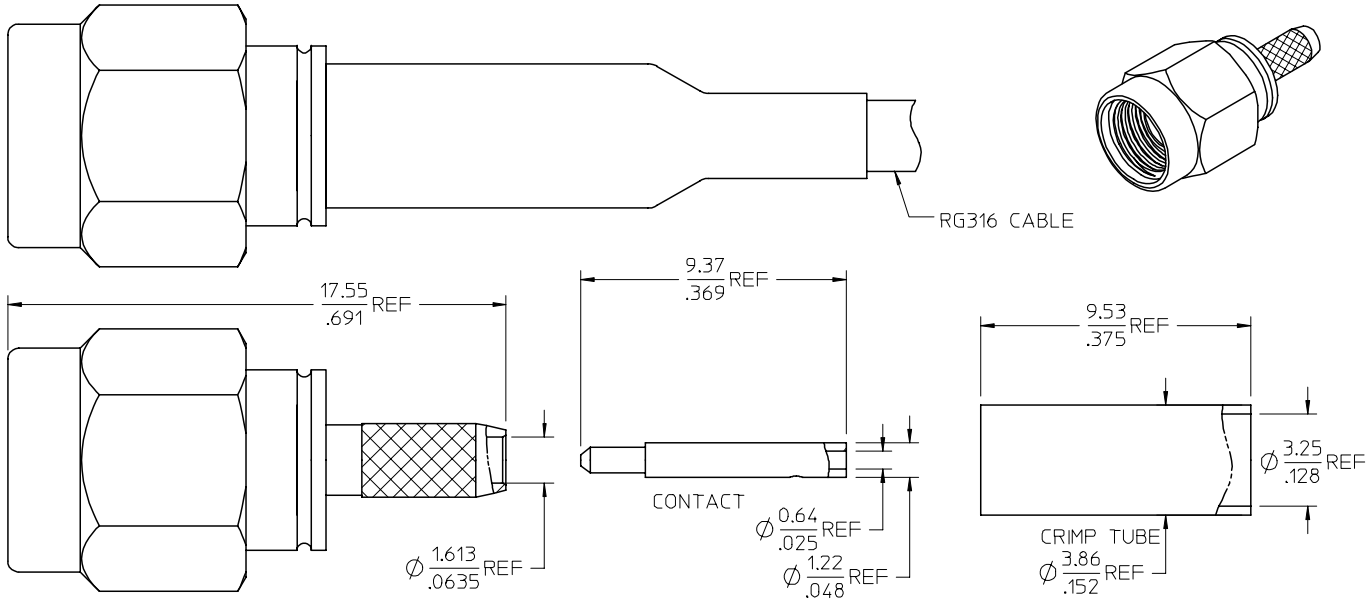

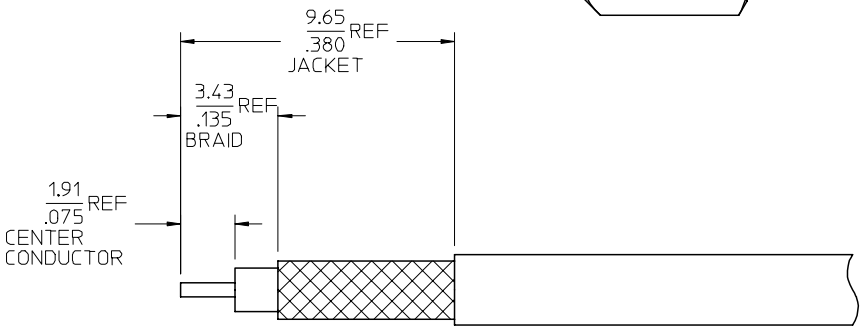

RECOMMENDED CABLE STRIP DIMENSION
RECOMMENDED CRIMP HEX DIE: .128

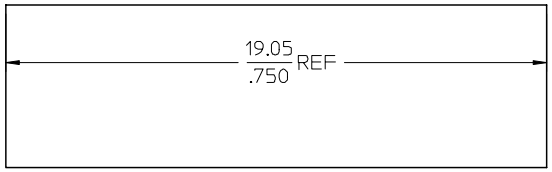

HEAT SHRINK TUBE

PS-89675-3260	PRODUCT SPECIFICATION
ES-89675-1580	CABLE ASSEMBLY INSTR.
MIL-STD-348A, FIG. 310.1	INTERFACE
SPECIFICATION	DESCRIPTION

73251-0452	73251-0450, PACKAGED BT TRAY (20 CAV.)
73251-0451	WITHOUT HEAT SHRINK TUBE
73251-0450	WITH HEAT SHRINK TUBE
PART NO.	DECRIPTION

REMOVE 73251-0453
EC NO: URF2008-0040 2007/08/14
DRWN:ELIN 2007/08/17
CH'KD: 2007/08/17
APPR:MHUANG
DESCRIPTION
REV

A3

QUALITY SYMBOLS
▼=0
Ⓒ=0

GENERAL TOLERANCES (UNLESS SPECIFIED)

	mm	INCH
4 PLACES	± ---	± ---
3 PLACES	± ---	± ---
2 PLACES	± ---	± ---
1 PLACE	± ---	± ---
ANGULAR ± 2 °		

DRAFT WHERE APPLICABLE MUST REMAIN WITHIN DIMENSIONS

DIMENSION STYLE: MM/IN
SCALE
DESIGN UNITS: METRIC
THIRD ANGLE PROJECTION

DRAWN BY	TEF	DATE 2000/11/09
CHECKED BY	SSS	DATE 2000/11/09
APPROVED BY	GMH	DATE 2000/11/09

TITLE: SMA PLUG, STR
50 OHMS, RG316
SMA-PC

molex MOLEX INCORPORATED

MATERIAL NO.: SEE TABLE
DOCUMENT NO.: SD-73251-045
SHEET NO.: 1 OF 1
SIZE: C

THIS DRAWING CONTAINS INFORMATION THAT IS PROPRIETARY TO MOLEX INCORPORATED AND SHOULD NOT BE USED WITHOUT WRITTEN PERMISSION