MATERIALS AND FINISHES

BODY ZINC ALLOY
PLATED NICKEL

CENTER CONTACT PHOSPHOR BRONZE
PLATED GOLD

INSULATOR POLYPROYLENE (94V0)

BOARD LOCK PHOSPHOR BRONZE
PLATED TIN

SOLDER TAIL COPPER
PLATED GOLD

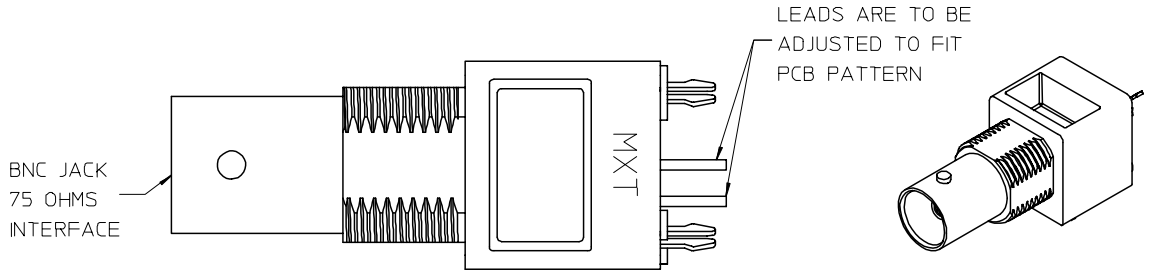

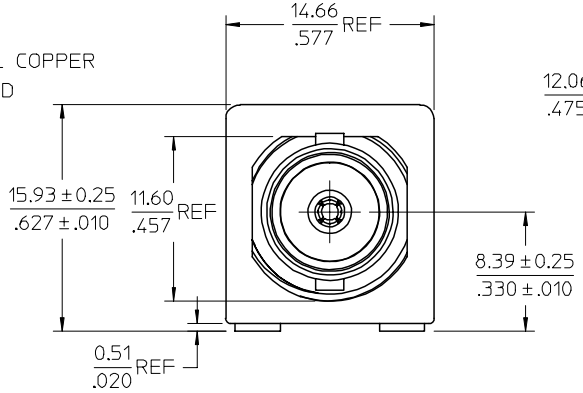

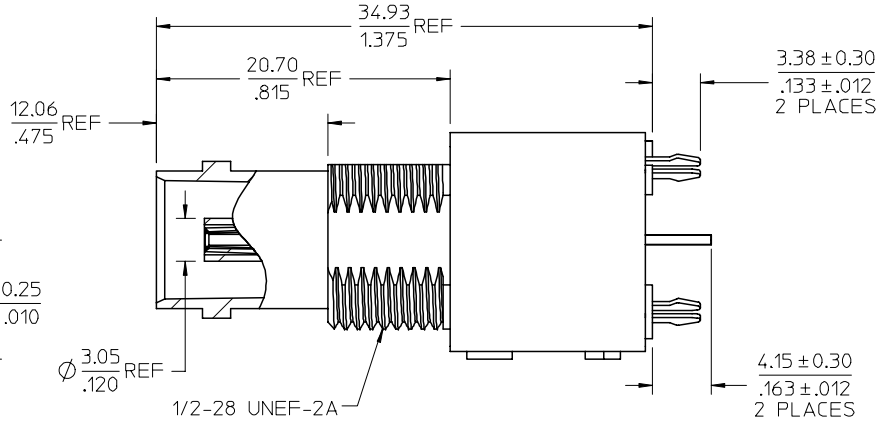

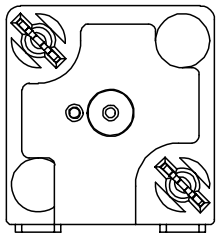

PART # 73101-0030

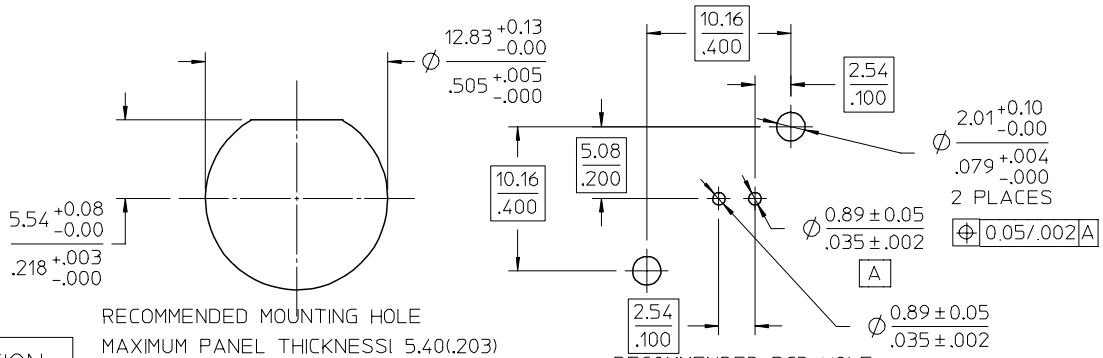

RECOMMENDED MOUNTING HOLE
MAXIMUM PANEL THICKNESS: 5.40(.203)
RECOMMENDED MOUNTING TORQUE:
1.36 N-m(12 INCH-LBS)

RECOMMENDED PCB HOLE
CONFIGURATION

PS-73598-0051	PRODUCT SPECIFICATION
SPECIFICATION	DESCRIPTION

REV	DESCRIPTION	
C1	CHG: REDREW IN SD MATERIAL FOR INSULATOR WAS POLYPROPYLENE (94V2)	EC NO: URF2007-0373 2007/03/28 DRWN:TFLAHERTY 2007/03/28 CHKD:SSHAH 2007/03/28 APPR: JWILENER 2007/03/28

QUALITY SYMBOLS: ▼=0 ⊽=0

GENERAL TOLERANCES (UNLESS SPECIFIED)

	mm	INCH
4 PLACES	± ---	± ---
3 PLACES	± ---	± ---
2 PLACES	± ---	± ---
1 PLACE	± ---	± ---
ANGULAR ± 2 °		

DRAFT WHERE APPLICABLE MUST REMAIN WITHIN DIMENSIONS

DIMENSION STYLE: MM/IN
SCALE
DESIGN UNITS: METRIC
THIRD ANGLE PROJECTION

DRAWN BY: WILSON DATE: 1996/03/01
CHECKED BY DATE
APPROVED BY DATE

TITLE: BNC JACK, VERTICAL PCB, DIE CAST,75 OHMS BNC-J/PCB

molex MOLEX INCORPORATED

MATERIAL NO. 731010030
DOCUMENT NO. SD-73101-003
SHEET NO. 1 OF 1
SIZE C

THIS DRAWING CONTAINS INFORMATION THAT IS PROPRIETARY TO MOLEX INCORPORATED AND SHOULD NOT BE USED WITHOUT WRITTEN PERMISSION