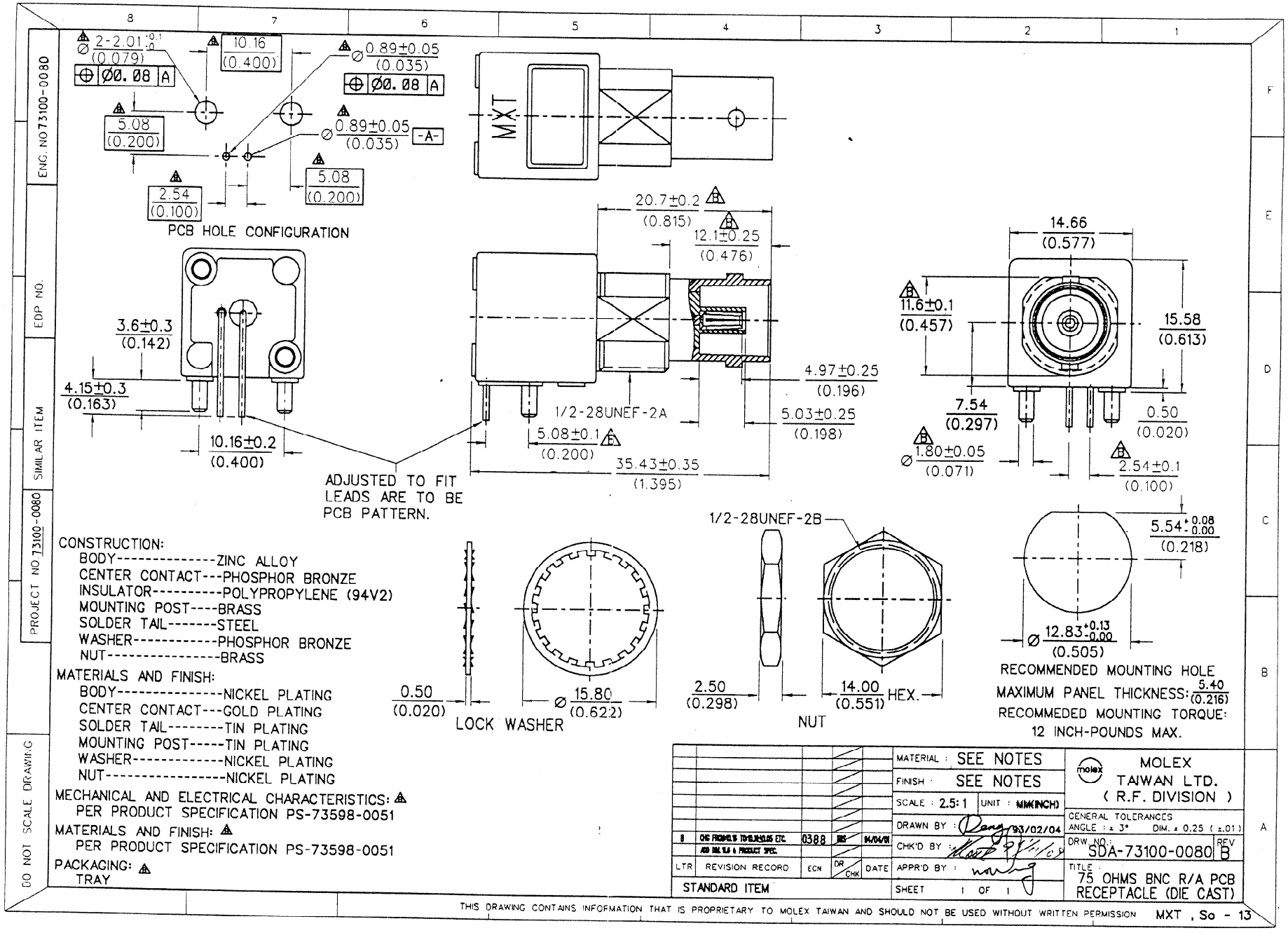
ENG. NO 73100-0080
EDP NO.
SIMILAR ITEM
PROJECT NO 73100-0080
DO NOT SCALE DRAWING
PCB HOLE CONFIGURATION
ADJUSTED TO FIT LEADS ARE TO BE PCB PATTERN.
1/2-28UNEF-2A
1/2-28UNEF-2B
LOCK WASHER
NUT
HEX.
RECOMMENDED MOUNTING HOLE
MAXIMUM PANEL THICKNESS: 5.40 (0.216)
RECOMMEDED MOUNTING TORQUE:
12 INCH-POUNDS MAX.
CONSTRUCTION:
BODY----------ZINC ALLOY
CENTER CONTACT---PHOSPHOR BRONZE
INSULATOR----------POLYPROPYLENE (94V2)
MOUNTING POST----BRASS
SOLDER TAIL-------STEEL
WASHER----------PHOSPHOR BRONZE
NUT----------BRASS
MATERIALS AND FINISH:
BODY----------NICKEL PLATING
CENTER CONTACT---GOLD PLATING
SOLDER TAIL--------TIN PLATING
MOUNTING POST-----TIN PLATING
WASHER----------NICKEL PLATING
NUT----------NICKEL PLATING
MECHANICAL AND ELECTRICAL CHARACTERISTICS:
PER PRODUCT SPECIFICATION PS-73598-0051
MATERIALS AND FINISH:
PER PRODUCT SPECIFICATION PS-73598-0051
PACKAGING:
TRAY
LTR REVISION RECORD ECN DR CHK DATE
STANDARD ITEM
MATERIAL : SEE NOTES
FINISH : SEE NOTES
SCALE : 2.5:1 UNIT : MM(INCH)
DRAWN BY : 93/02/04
CHK'D BY :
APPR'D BY :
SHEET 1 OF 1
MOLEX TAIWAN LTD. (R.F. DIVISION)
GENERAL TOLERANCES
ANGLE : ± 3° DIM. ± 0.25 (±.01)
DRW NO. SDA-73100-0080 REV B
TITLE : 75 OHMS BNC R/A PCB RECEPTACLE (DIE CAST)
THIS DRAWING CONTAINS INFORMATION THAT IS PROPRIETARY TO MOLEX TAIWAN AND SHOULD NOT BE USED WITHOUT WRITTEN PERMISSION
MXT , So - 13

BNC-J/PCB/RA