THIS DRAWING IS UNPUBLISHED. RELEASED FOR PUBLICATION ,19 .
© COPYRIGHT 19 BY AMP INCORPORATED. ALL RIGHTS RESERVED.

LOC	DIST
AG	53

REVISIONS

P	LTR	DESCRIPTION	DATE	DWN	APVD
	D	REDWN ON CAD PER 0G50-0207-98	24-JUN-99	LM	GR

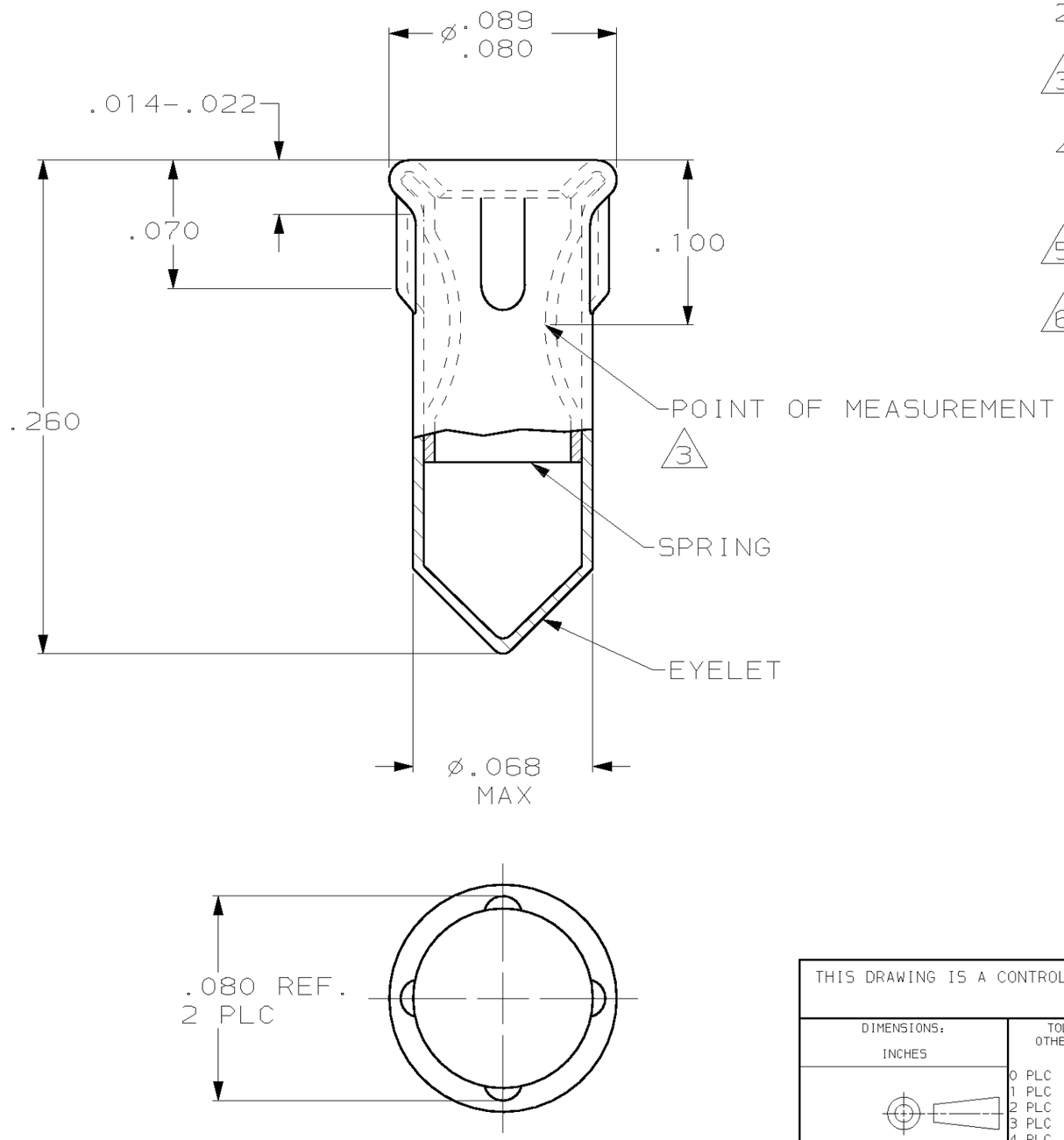

1. MATERIAL: EYELET-COPPER (QQ-C-533)
   SPRING-BERYLLIUM COPPER (QQ-C-576).

2. TIN PL. .000150 MIN THK

3. GOLD PL. .000030 MIN THK

4. RECOMMENDED HOLE SIZE FOR MACHINE INSERTION .069-.075

5. TIN PLATE .000100 MIN THK

6. TIN-LEAD PLATE .000150 MIN THK

DIA	LENGTH	SPRING	EYELET	PART NUMBER
.037-.041	.100-.210	3	6	645500-3
.037-.041	↑	NOTE 5	↑	645500-2
.037-.041	.100-.210	NOTE 3	NOTE 2	645500-1
PIN		FINISH		

THIS DRAWING IS A CONTROLLED DOCUMENT.

DIMENSIONS: INCHES

TOLERANCES UNLESS OTHERWISE SPECIFIED:

0 PLC	±-
1 PLC	±-
2 PLC	±-
3 PLC	±.010
4 PLC	±-
ANGLES	±-

MATERIAL –

FINISH SEE TABLE

DWN L.A. McEACHIN 24-JUN-99
CHK G.S. RIDGILL 19-JUL-99
APVD G.S. RIDGILL 19-JUL-99
PRODUCT SPEC –
APPLICATION SPEC –
WEIGHT –

AMP Incorporated
Harrisburg, PA 17105-3608

NAME SOCKET, MSS, SERIES 4

SIZE	CAGE CODE	DRAWING NO	RESTRICTED TO
A3	00779	C- 645500	–

CUSTOMER DRAWING

SCALE NTS SHEET 1 OF 1 REV D

AMP 1470-19 REV 11JUN97

06-JUL-99 15:40:29 amp45354 /home/amp45354/98-207