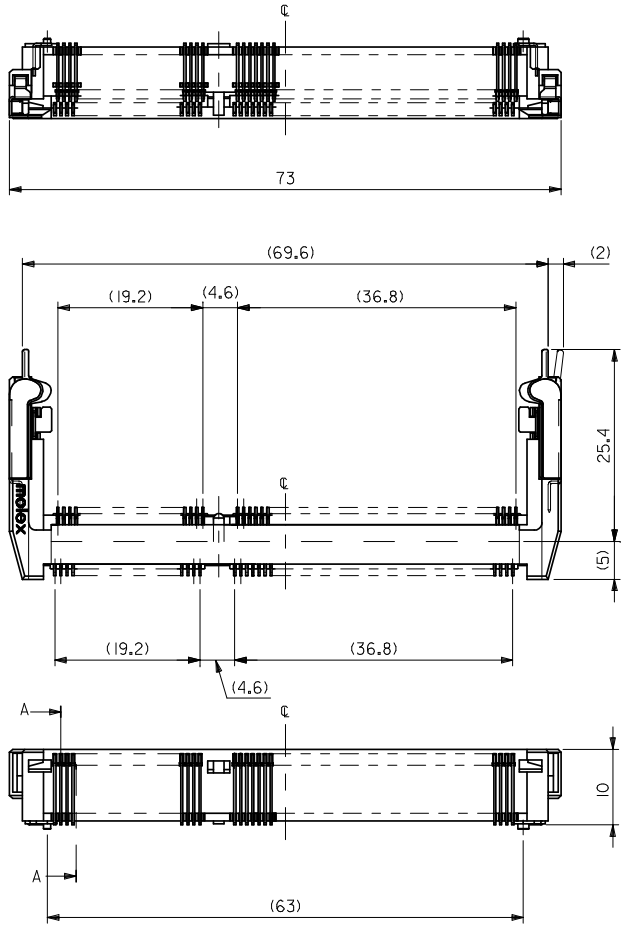

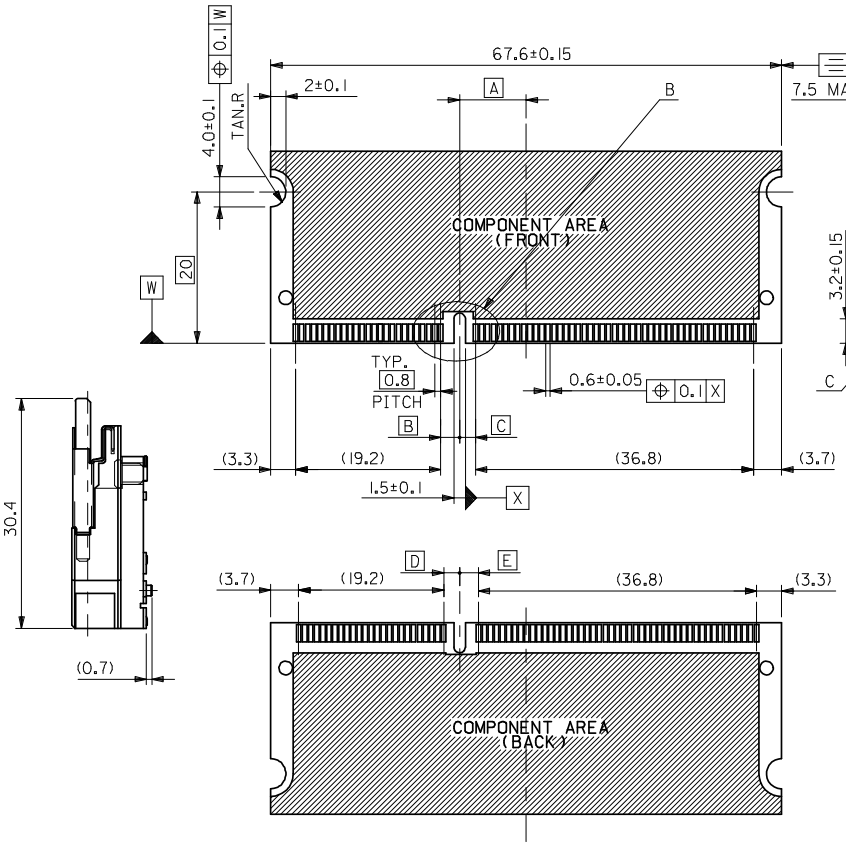

推奨基板寸法
RECOMMENDED MATING BOARD CONFIGURATION
(THK:1.0±0.1)

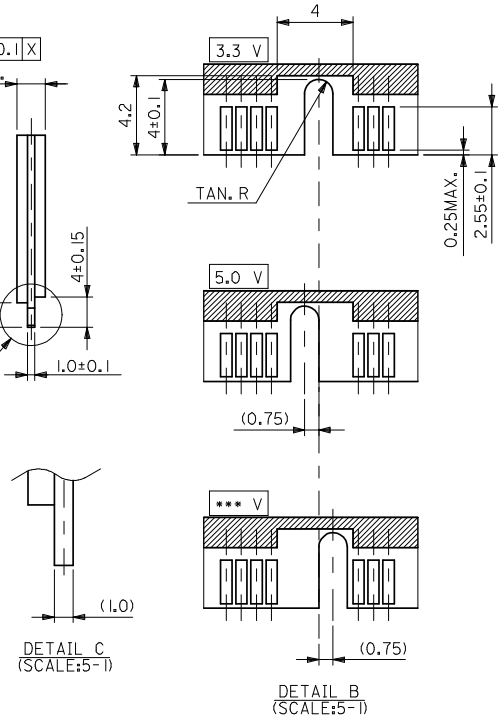

DETAIL C
(SCALE:5-1)

DETAIL B
(SCALE:5-1)

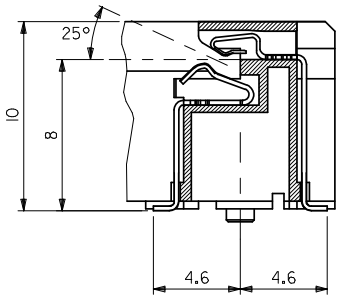

SECTION A-A
(SCALE: 5-1)

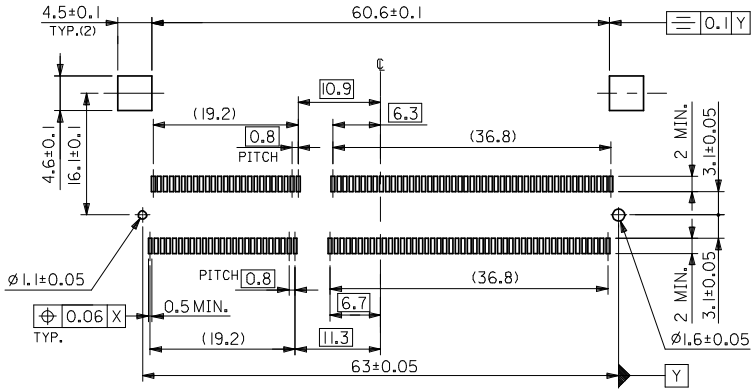

推奨基板寸法
RECOMMENDED PCB PATTERN LAYOUT
(THK:1.2±0.1)

注記 NOTES

1. 材料 MATERIAL
ハウジング : ガラス入りLCP、白色、UL94V-0
HOUSING : G.F. LCP,WHITE,UL94V-0
ターミナル : 燐青銅
TERMINAL : PHOSPHOR BRONZE
ネイル : 黄銅
NAIL : BRASS
ラッチカバー : ステンレス鋼
LATCH COVER : STAINLESS STEEL

2. めっき仕様 PLATING
ターミナル
TERMINAL
接点部 : 金めっき 0.25μmMIN.
CONTACT AREA : GOLD 0.25 μmMIN.
半田付け部 : 半田めっき 1.0μmMIN.
SOLDER TAIL AREA : TIN-LEAD 1.0μmMIN.
下地めっき : ニッケルめっき2.0μmMIN.
UNDER-PLATING : NICKEL 2.0μmMIN.
ネイル
NAIL
半田めっき : 2.0μmMIN.
TIN-LEAD : 2.0μmMIN.

3. テール平坦度は、0.1 MAX.
TAILS COPLANARITY TO BE 0.1 MAX.

3.25	1.35	2.85	1.75	9.55	5.0V	標準トレー NORMAL TRAY	54189-1441
E	D	C	B	A	POWER SUPPLY	梱包トレー PACKAGING TRAY	ENG.NO.

REVISED
EC NO: J2008-3096
DRWN:K INOSHITAA 2008/04/09
CH'KD:T. HARUYAMA 2008/04/09
APPR:NUKITA 2008/06/09
DESCRIPTION
REV C

GENERAL TOLERANCES (UNLESS SPECIFIED)

10 UNDER	±0.2
10 OVER 30 UNDER	±0.25
30 OVER	±0.3
ANGULAR ±3 °	

DRAFT WHERE APPLICABLE MUST REMAIN WITHIN DIMENSIONS

DIMENSION STYLE: MM ONLY
SCALE: 2:1
DESIGN UNITS: METRIC
THIRD ANGLE PROJECTION

DRAWN BY: M. YAGI DATE
CHECKED BY: Y ITO DATE
APPROVED BY: H IKESUGI DATE

TITLE: SGRA 0.8MM S.O DIMM HSG ASSY 144CKT (H=10)

MOLEX INCORPORATED

MATERIAL NO.: SEE TABLE
DOCUMENT NO.: SD-54189-001
SHEET NO.: 1 OF 1
SIZE: A2

THIS DRAWING CONTAINS INFORMATION THAT IS PROPRIETARY TO MOLEX INCORPORATED AND SHOULD NOT BE USED WITHOUT WRITTEN PERMISSION