Tous droits strictement reserves. Reproduction ou communication a des tiers interdite sous quelque forme que ce soit sans autorisation ecrite du propietaire. Propriete de c FCI. Droits de reproduction FCI.

All rights strictly reserved. Reproduction or issue to third parties in any form whatever is not permitted without written authority from the proprietor. Property of FCI. Copyright FCI.

PRODUCT NO.	ROWS	E2	P11	P10	P9	P8	P7	P6	6	5	4	3	2	1	P5	P4	P3	P2	P1	E1
			POWER						SIGNAL						POWER					
51866-008__ NOTE: 3	D C B A		PE	PE	PE	PE	PE	PE	S R P N	S R P N	S R P N	S R P N	S R P N	S R P N	PE	PE	PE	PE	PE	

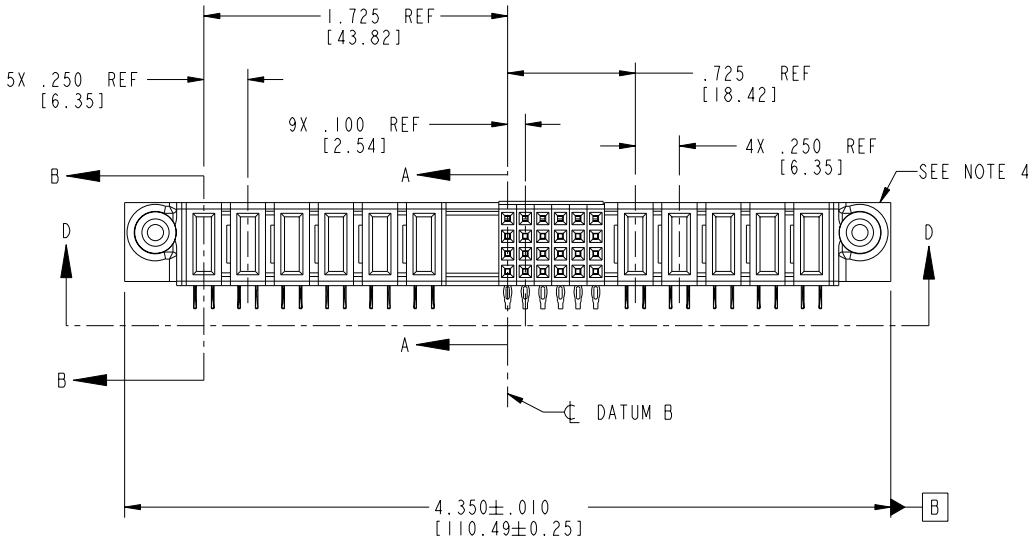

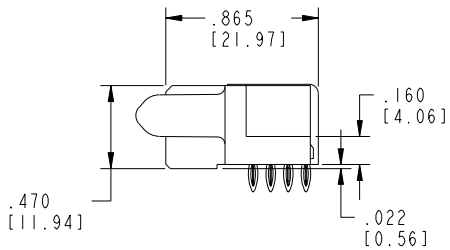

CODE	DIM "M" MATING LENGTH	CONTACT TYPE
N	N/A [N/A]	SIGNAL
P	N/A [N/A]	SIGNAL
R	N/A [N/A]	SIGNAL
S	N/A [N/A]	SIGNAL
PE	.042 [1.07]	POWER

mat'l code	SEE NOTE 2		
ltr	ecn no.	dr	date
A	V12545	JWS	11/29/01
B	DG05-0232	SJ	07/20/05

tolerances unless otherwise specified	
linear	.XX±.01/0.X±0.3
	.XXX±.005/0.XX±0.13
	.XXXX±.0020/0.XXX±0.051
angles	0°±2°
dr	J. SHAFFER 11/29/01
engr	J. ALLISON 11/29/01
chr	J. ALLISON 11/29/01
appd	J. ALLISON 11/29/01

sheet index	revision	B	B	B	B
	sheet	1	2	3	4

CUSTOMER COPY

projection

INCH/MM

scale 1:1

FCI www.fciconnect.com

title 5P + 24S + 1M + 6P R/A PRESS FIT RECEPT.

product family PwrBlade

code 213

size A

dwg no 51866-008

sheet 1 of 4

cage code 22526

Pro/E

PDM: Rev:B STATUS:Released Printed: Aug 14, 2007

Tous droits strictement reserves. Reproduction ou communication a des tiers interdite sous quelque forme que ce soit sans autorisation ecrite du propietaire. Propriete de c FCI. Droits de reproduction FCI.

All rights strictly reserved. Reproduction or issue to third parties in any form whatever is not permitted without written authority from the proprietor. Property of FCI. Copyright FCI.

PRODUCT NUMBER
51866-008__ NOTE: 3

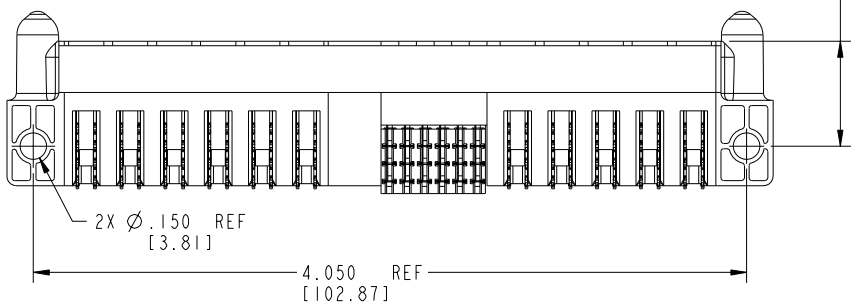

VIEW D-D

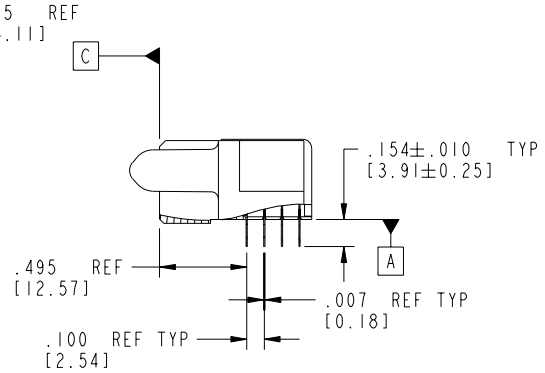

SECTION A-A

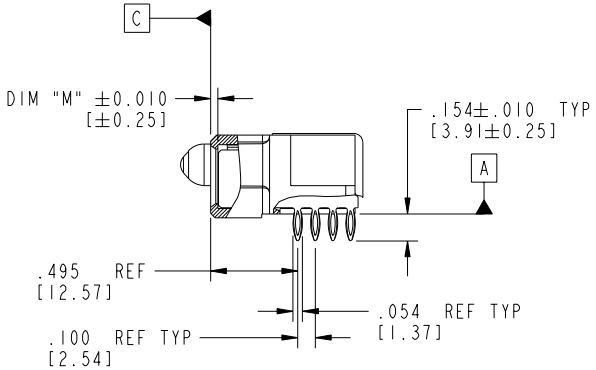

SECTION B-B

mat'l code	SEE NOTE 2			tolerances unless otherwise specified			CUSTOMER COPY	FCI www.fciconnect.com
ltr	ecn no.	dr	date	linear	.XX±.01/0.X±0.3		projection	title 5P + 24S + 1M + 6P R/A PRESS FIT RECEPT.
B					.XXX±.005/0.XX±0.13			
					.XXXX±.0020/0.XXX±0.051			
				angles	0° ±2°		INCH/MM	product family PwrBlade / code 213
				dr	J. SHAFFER	11/29/01		
				engr	J. ALLISON	11/29/01		size A / dwg no 51866-008
				chr	J. ALLISON	11/29/01	scale 1:1	sheet 2 of 4
				appd	J. ALLISON	11/29/01		
sheet index	revision / sheet							

Pro/E

cage code 22526

PDM: Rev:B STATUS: **Released** Printed: Aug 14, 2007

Tous droits strictement reserves. Reproduction ou communication a des tiers interdite sous quelque forme que ce soit sans autorisation ecrite du propietaire. Propriete de c FCI. Droits de reproduction FCI.

All rights strictly reserved. Reproduction or issue to third parties in any form whatever is not permitted without written authority from the proprietor. Property of FCI. Copyright FCI.

PRODUCT NUMBER
51866-008__ NOTE: 3

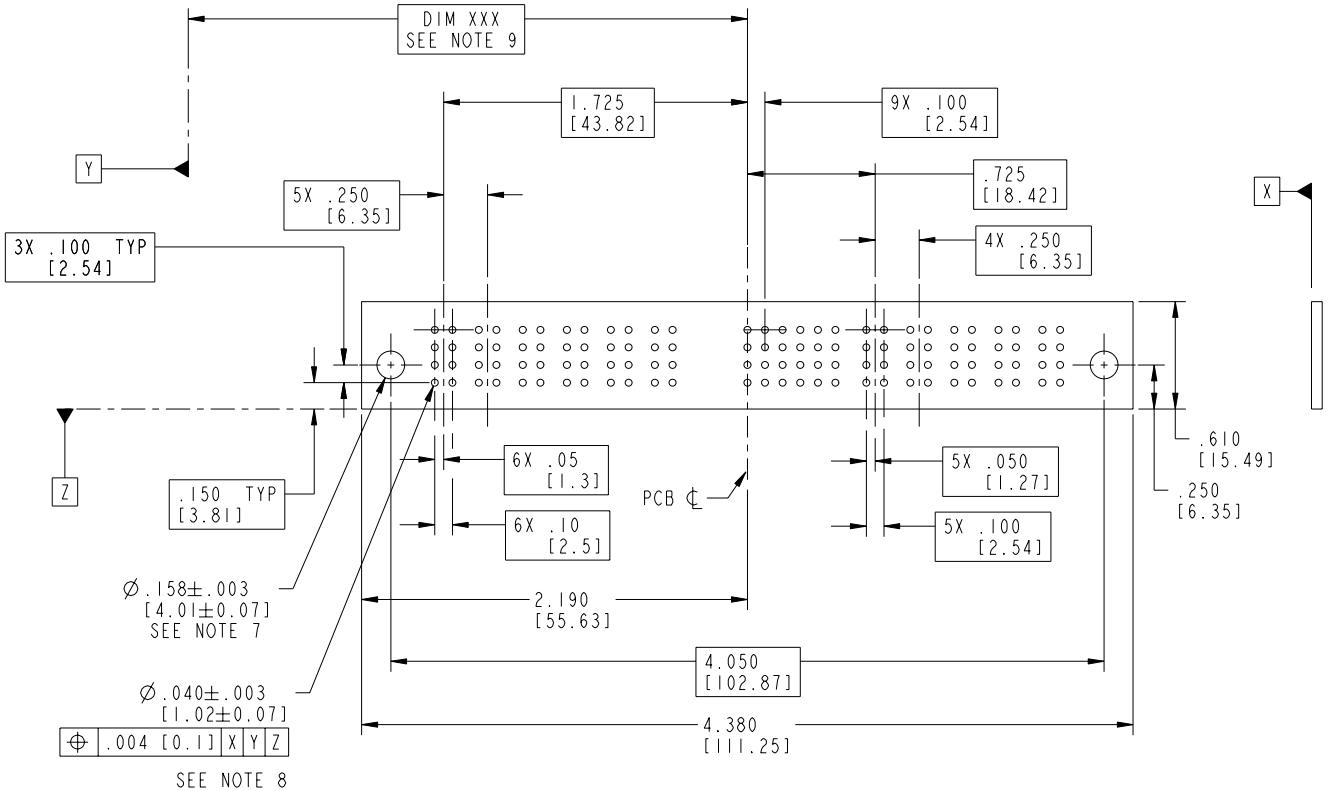

mat'l code	SEE NOTE 2			tolerances unless otherwise specified			CUSTOMER COPY	FCI www.fciconnect.com
ltr	ecn no.	dr	date	linear	.XX±.01/0.X±0.3		projection	title 5P + 24S + 1M + 6P R/A PRESS FIT RECEPT.
B					.XXX±.005/0.XX±0.13			
					.XXXX±.0020/0.XXX±0.051		INCH/MM	product family PwrBlade
				angles	0° ±2°			code 213
				dr	J. SHAFFER	11/29/01		size A / dwg no 51866-008
				engr	J. ALLISON	11/29/01	scale 1:1	sheet 3 of 4
				chr	J. ALLISON	11/29/01		
				appd	J. ALLISON	11/29/01		
sheet index	revision sheet							cage code 22526

Pro/E

PDM: Rev:B STATUS: **Released** Printed: Aug 14, 2007

Tous droits strictement reserves. Reproduction ou communication a des tiers interdite sous quelque forme que ce soit sans autorisation ecrite du propietaire. Propriete de c FCI. Droits de reproduction FCI.

PRODUCT NUMBER
51866-008__ NOTE:③

NOTES:

1. DIMENSIONS AND TOLERANCES ARE IN ACCORDANCE WITH ASME Y14.5M, 1994 UNLESS OTHERWISE SPECIFIED.

CONNECTORS NOTES:

② HOUSING MATERIAL: UL 94 V-0 GLASS FILLED HIGH TEMP THERMO PLASTIC
POWER CONTACT MATERIAL: COPPER ALLOY
SIGNAL PIN MATERIAL: COPPER ALLOY

③ PLATING:

51866-008 Singal Pin:30u"/0.76um Au OVER 50u"/1.27um Ni ON THE CONTACT AREA, AND 100u"/2.54um SnPb PLATING OVER 50u"/1.27um Ni ON THE TERMINATION SECTION.
Power Pin:30u"/0.76um Au OVER 50u"/1.27um Ni ON THE CONTACT AREA, AND 100u"/2.54um SnPb PLATING OVER 50u"/1.27um Ni ON THE TERMINATION SECTION.

51866-008LF Singal Pin:30u"/0.76um Au OVER 50u"/1.27um Ni ON THE CONTACT AREA, AND 78u"/2.00um Sn PLATING OVER 50u"/1.27um Ni ON THE TERMINATION SECTION.
Power Pin:30u"/0.76um Au OVER 50u"/1.27um Ni ON THE CONTACT AREA, AND 78u"/2.00um Sn PLATING OVER 50u"/1.27um Ni ON THE TERMINATION SECTION.

PART NUMBER 51866-008LF MEETS EUROPEAN UNION DIRECTIVE AND OTHER COUNTRY REGULATIONS AS DESCRIBED IN GS-22-008.

THE HOUSING WILL WITHSTAND EXPOSURE TO 260° PEAK TEMPERATURE FOR 10 SECONDS IN A WAVE SOLDER APPLICATION WITH A CIRCUIT BOARD.

④ "MANUFACTURER" NAME, P/N, AND DATE CODE TO APPEAR ON THIS SURFACE.

⑤ PRODUCT SPECIFICATION GS-12-149.

PCB - NOTES:

⑥ ALL HOLE DIAMETERS ARE FINISHED HOLE SIZE.

7. HOLD DOWN THROUGH HOLES ARE UNPLATED.

8. Ø.0453±0.0010 [1.151±0.025] DRILLED HOLES PLATED WITH 0.0003 [0.008] MIN SnPb OVER .001 [0.03] TO .003 [0.08] Cu PLATING TO ACHIEVE Ø.040±.003 [1.02±.07] HOLE.

9. "DIM XXX" TO BE DETERMINED BY THE CUSTOMER.

10. USE FCI CAM TOOL 430140-XXX TO APPLY CONNECTOR TO PCB.

mat'l code	SEE NOTE 2		
ltr	ecn no.	dr	date
B			

tolerances unless otherwise specified		
linear	.XX±.01/0.X±0.3	
	.XXX±.005/0.XX±0.13	
	.XXXX±.0020/0.XXX±0.051	
angles	0°±2°	
dr	J. SHAFFER	11/29/01
engr	J. ALLISON	11/29/01
chr	J. ALLISON	11/29/01
appd	J. ALLISON	11/29/01

CUSTOMER COPY

projection

INCH/MM

scale 1:1

FCI www.fciconnect.com

title 5P + 24S + 1M + 6P R/A PRESS FIT RECEPT.

product family PwrBlade

code 213

size A

dwg no 51866-008

sheet 4 of 4

sheet index | revision | sheet

cage code 22526

Pro/E

All rights strictly reserved. Reproduction or issue to third parties in any form whatever is not permitted without written authority from the proprietor. Property of FCI. Copyright FCI.

PDM: Rev:B STATUS:Released Printed: Aug 14, 2007