DWG. NO. SD-500075-007

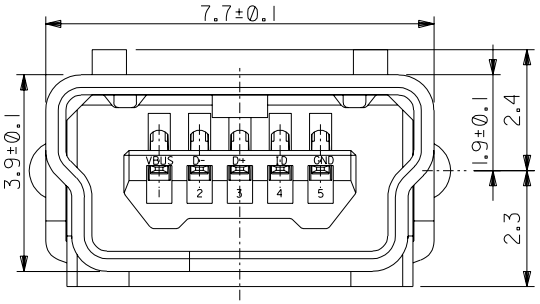

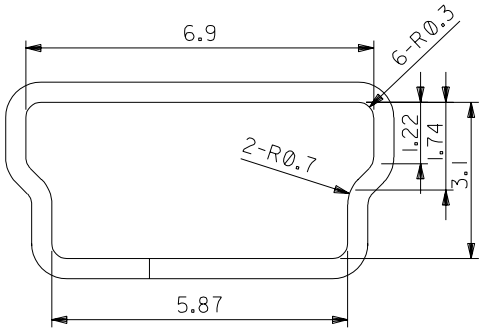

DEATAIL FRONTAGE

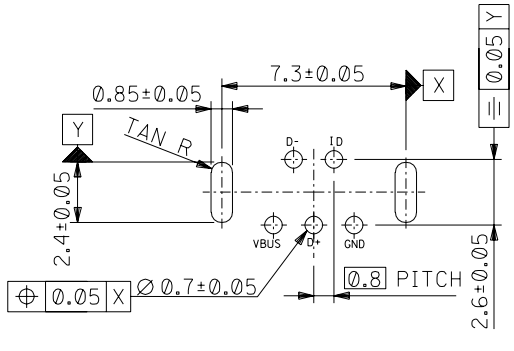

コネクタ実装側 (CONNECTOR MOUNT SIDE)

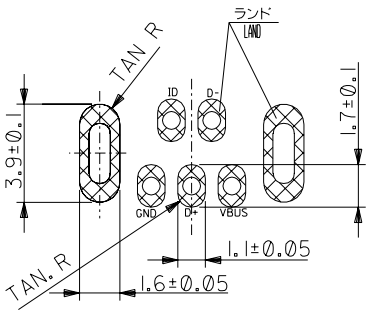

逆側 (REVERSE SIDE)

推奨基板寸法

RECOMMENDED P.C.B. PATTERN LAYOUT

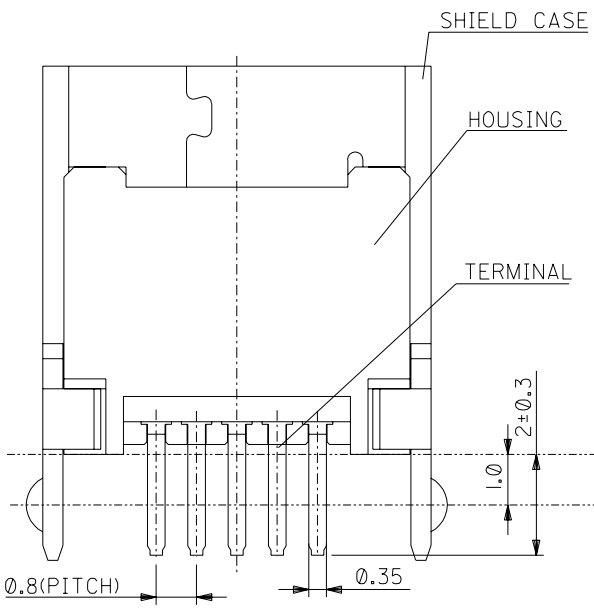

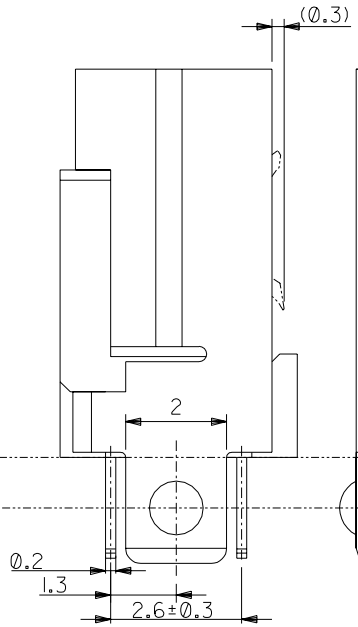

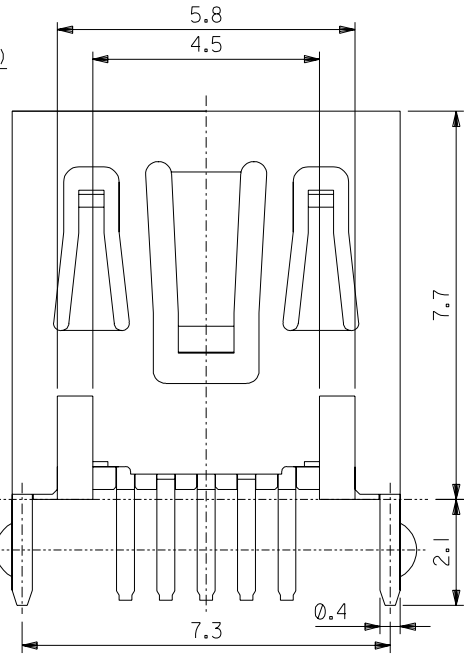

注記
NOTES

1. 材質
   MATERIAL
   ハウジング：耐熱樹脂　ガラス充填,黒色,UL94V-0
   HOUSING:HEAT RESISTANT PLASTIC,GLASS FILLED,BLACK,UL94V-0
   ターミナル：銅合金（t=0.2）
   TERMINAL:COPPER ALLOY(t=0.2)
   シールド ケース：銅合金（t=0.4）
   SHIELD CASE:COPPER ALLOY(t=0.4)
2. メッキ仕様
   PLATING
   ターミナル TERMINAL
   接点部：金メッキ
   CONTACT AREA:GOLD
   半田付け部：錫メッキ
   SOLDER TAIL AREA:TIN
   下地部：ニッケルメッキ
   UNDER PLATING:NICKEL
   シールド ケース SHIELD CASE
   錫メッキ
   TIN
   下地部：ニッケルメッキ
   UNDER PLATING:NICKEL
3. 本製品は500075-0519の鉛フリー品である。
   THIS PRODUCT IS LEAD FREE OF 500075-0519.

500075-0517
MATERIAL NO.

MODEL NO. 500075-**17

DO NOT SCALE DRAWING

第84NO. DRWN: CH'K: APPR:	第83NO. DRWN: CH'K: APPR:	第82NO. DRWN: CH'K: APPR:	第81NO. DRWN: CH'K: APPR:	RELEASED 第80NO. J2004-3443 DRWN: H.KAWABATA '04/03/30 CH'K: K.TOJO '04/03/30 APPR: M.SASAO '04/03/30	0

MATERIAL 材料	SEE NOTES	
FINISH 仕上げ	SEE NOTES	
WIRE RANGE 適用電線範囲	—	
INS. RANGE 被覆外径	—	

DESCRIPTION / REV

GENERAL TOLERANCES: (UNLESS SPECIFIED) 一般公差	
10 UNDER 未満	±0.2
10 OVER 以上 30 UNDER 未満	±0.25
30 OVER 以上	±0.3
ANGLE 角度	±3°

SCALE 10 : 1
DESIGN UNITS ☒mm ☐INCH
THIRD ANGLE PROJECTION
DIMENSIONS: ☐mm/INCH ☐INCH/mm ☒mm ONLY
SHT REV
REVISE ON CAD ONLY

DRAWN BY & DATE H.KAWABATA '04/03/30
CHECKED BY & DATE K.TOJO '04/03/30
APPROVED BY & DATE M. Sasao '04/03/30

TITLE: USB SERIES MINI-B STRAIGHT TYPE 2 RECEPTACLE ASS'Y -LEAD FREE-

molex MOLEX INCORPORATED

CAD FILENAME SD-500075-007.S01
MATERIAL NO. SEE CHART
DRAWING NO. SD-500075-007
SHEET NO. 1 OF 1
SIZE B

THIS DRAWING CONTAINS INFORMATION THAT IS PROPRIETARY TO MOLEX INCORPORATED AND SHOULD NOT BE USED WITHOUT WRITTEN PERMISSION.

EN-02J(097) MXJ-54