FO-55111-A

HONEYWELL PART NUMBER
313SX30-T
PRODUCT CODE VDT0273

REV	DOCUMENT	CHANGED BY	CHECK
7	0038558	SS 08MAY08	BLR

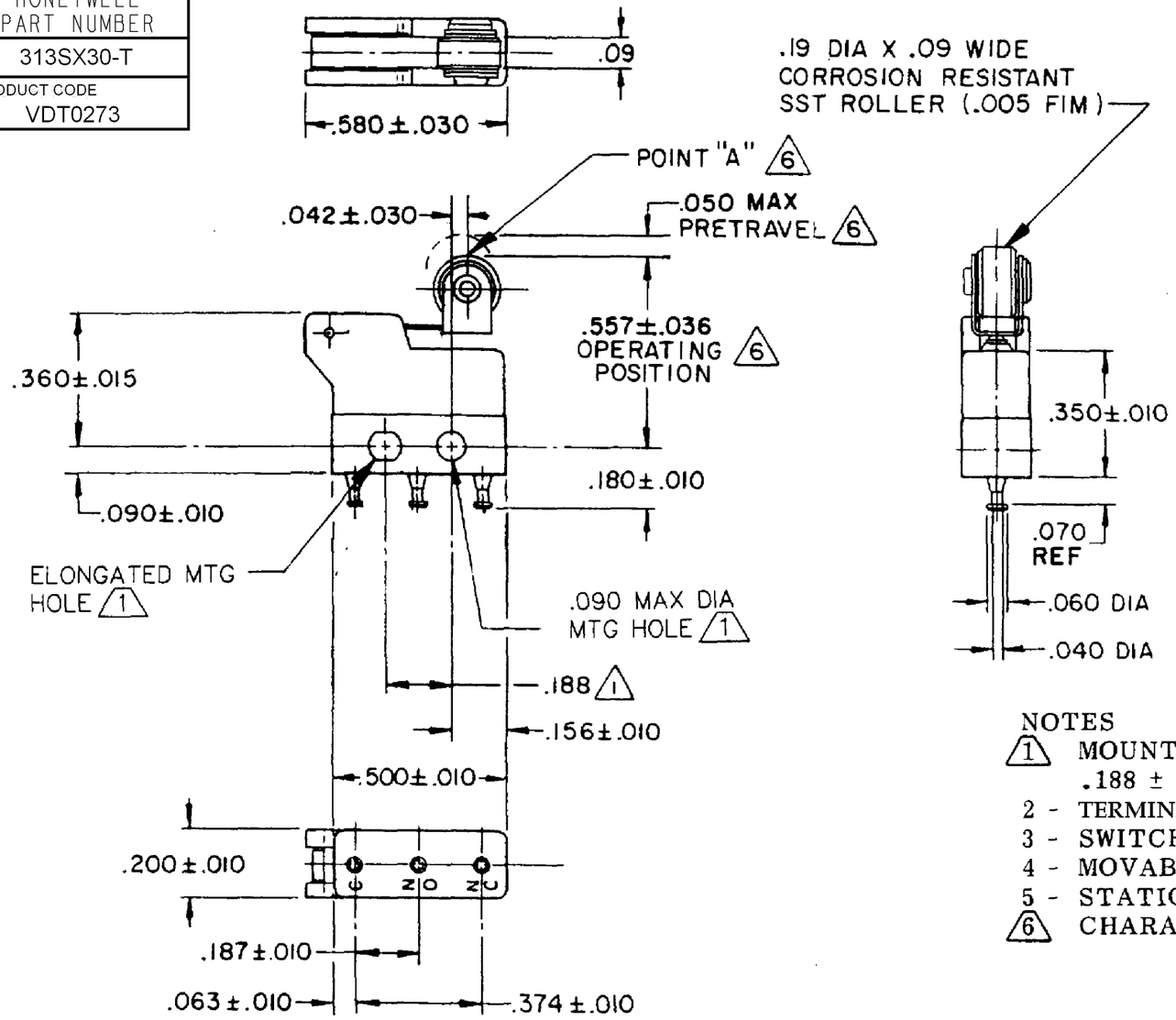

NOTES

1. MOUNTING HOLES WILL ACCEPT PINS OR SCREWS OF .087 MAX DIA ON .188 ± .002 CENTERS
2 - TERMINALS ARE SOLDER DIPPED WITH RoHS-COMPLIANT TIN/COPPER/SILVER SOLDER.
3 - SWITCH WILL WITHSTAND TEMPERATURE OF 250°F
4 - MOVABLE CONTACT MATERIAL - 24K GOLD OVERLAY
5 - STATIONARY CONTACT MATERIAL - GOLD ALLOY
6. CHARACTERISTICS ARE TAKEN AT POINT "A"

RELEASE NO.	PR-16995-T
REPLACES	X89561-SX

CHARACTERISTICS 6

OPERATING FORCE ------ 68 GRAMS MAX
RELEASE FORCE --------- 11 GRAMS MIN
DIFFERENTIAL TRAVEL --- .015 MAX
OVERTRAVEL ---------- .010 MIN

ELECTRICAL DATA

CONTACT ARRANGEMENT
SPDT

30 VOLTS DC RATING

	SEA LEVEL	50,000 FT
INDUCTIVE	0.5 AMP	0.5 AMP
RESISTIVE	1 AMP	1 AMP

MAXIMUM INRUSH 2 AMP

APPROVALS			
KEMA, CE	1A 250 V ~ T125 25E3		
UL, CSA	1A 125 VAC		BRAND L22J

DESIGN UNITS: INCH
TOLERANCES UNLESS NOTED:

NO PLACE	X	±	
ONE PLACE	.X	±	0.030
TWO PLACE	.XX	±	0.015
THREE PLACE	.XXX	±	0.005
FOUR PLACE	.XXXX	±	
ANGLES		±	

THIRD ANGLE PROJECTION

DRAWN	SPK	27FEB08
CHECK	RJ	27FEB08

THIS DRAWING COVERS A PROPRIETARY ITEM AND IS THE PROPERTY OF HONEYWELL. THIS DRAWING IS NOT TO BE COPIED OR USED WITHOUT THE PERMISSION OF HONEYWELL.

INTERPRET PER ANSI Y14.5M-1982
OTHER HONEYWELL ENGINEERING STANDARDS MAY APPLY

RASTER

Honeywell

TITLE
SWITCH - BASIC

SIZE	TYPE	DRAWING NAME	REV
B	I	313SX30-T	7

SCALE - | WEIGHT:.003 LB MAX | SHEET 1 OF 1