SHEET OF

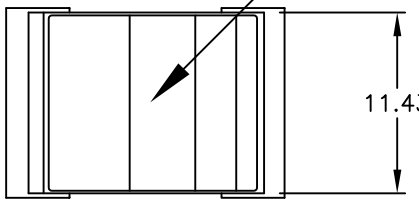


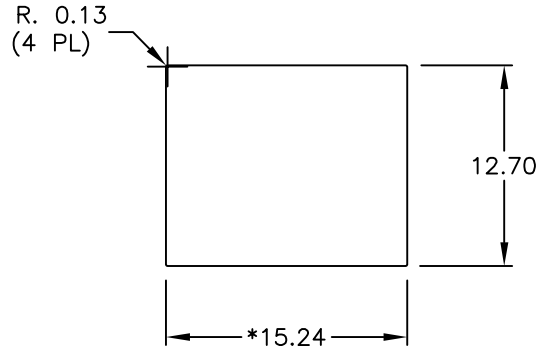


RECOMMENDED PANEL MOUNTING

PANEL THICKNESS

1.52 TO 3.18

▲ * DIMENSION IS 15.75/15.88
FOR PANEL THICKNESS BETWEEN
1.52mm TO 3.18mm

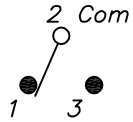


CIRCUIT: SPDT

| SWITCH FUNCTION | | |
|---|---|---|
| POS. 1 | POS. 2 | POS. 3 |
| | | |
| (ON) | OFF | (ON) |
| 2-3 | OPEN | 2-1 |

( )=Momentary

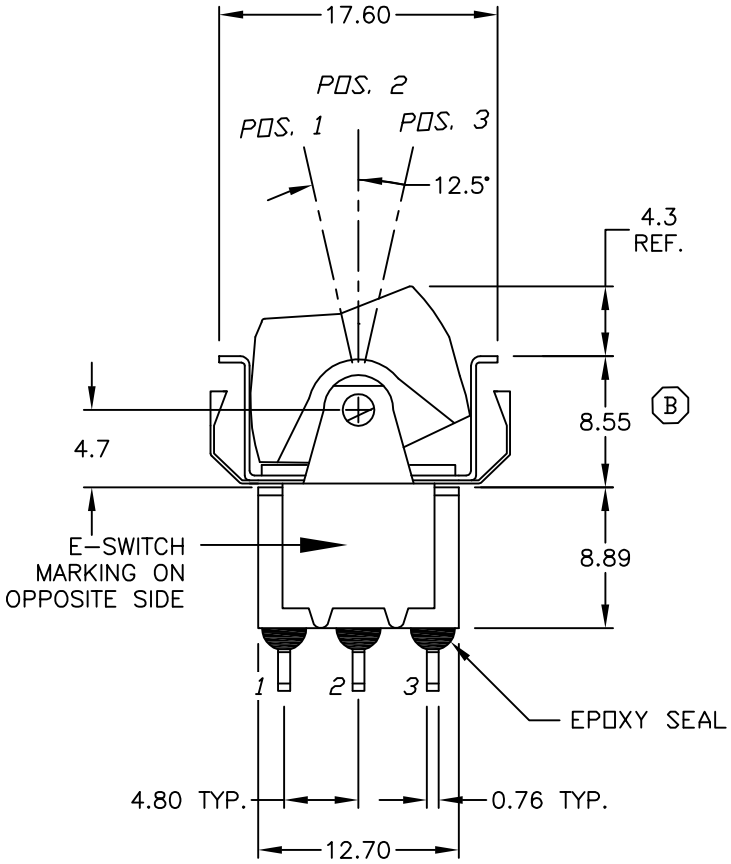


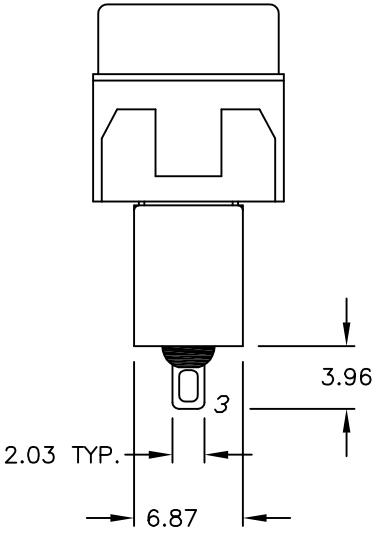


NOTES:
1. ALL DIMENSIONS IN MM
2. GENERAL TOLERANCE: X.X=±0.4
   X.XX=±0.25
3. TERM. NOS. FOR REF. ONLY
4. RATING: 5A @120VAC or 28VDC
   2A @250VAC
5. MATERIAL: FIXED TERMINAL & MOVING CONTACT
   Copper Alloy w/Silver plate
6. CONTACT RESISTANCE: 10mILLI Ohms max initial
   @2-4VDC, 100mA for AG & AU
7. ELECTRICAL LIFE: 50,000 make-and-break
   cycles at full load.
8. INSULATION RESISTANCE: 1,000M ohm min.
9. DIELECTRIC STRENGTH: 1000V RMS @sea level
10. OPERATING TEMP.: -30°C to 85°C
11. 2002/95/EC (ROHS) COMPLIANT

| REV. | ECN No. | DESCRIPTION | DATE | CHKD |
|---|---|---|---|---|
| B | 17570 | CHANGED 8.3 DIM. TO 8.55 | 8/17/07 | BF |
| A | 12371 | RELEASED | 8/14/02 | CB |

THE INFORMATION CONTAINED IN THIS DOCUMENT
IS PROPRIETARY TO E-SWITCH AND IS
NOT TO BE COPIED OR TRANSFERRED

E-SWITCH™

TITLE 300SP4R9BLKM1QE

| SCALE | DATE | DR | DWG | REV |
|---|---|---|---|---|
| 2:1 | 8/17/07 | BF | T314019 | B |