REV.	DATE	DESCRIPTION
A	12/29/00	REVISE PLATING TO SILVER
B	06/01/04	UPDATE DRAWING FORMAT
C	04/19/06	REVISE PLATING TO NEXCOTE
D	12/17/06	REVISE BODY STYLE TO HEX

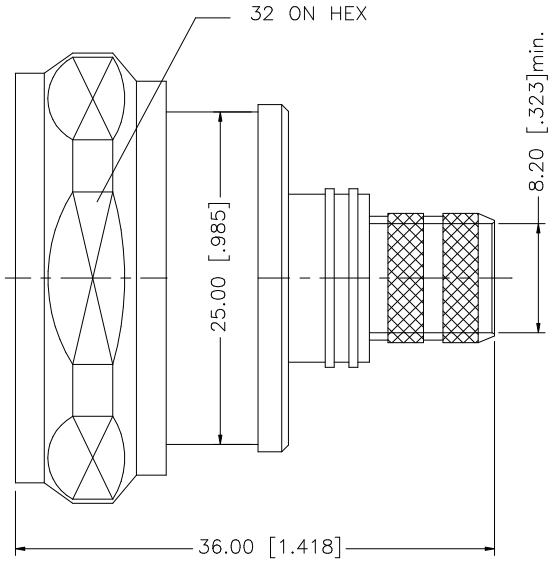

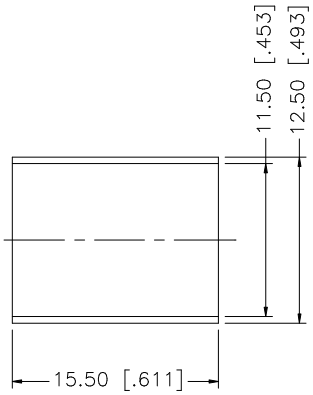

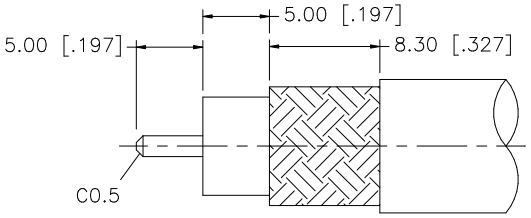

RECOMMENDED CABLE
STRIPPING DIM'S

NOTES:

1. CRIMPED FERRULE HEX CRIMP SIZE .429"

	DESCRIPTION	MATERIAL	FINISH	QTY
8				
7				
6				
5	FERRULE	COPPER	NEXCOTE	1
4	GASKET	SILICONE	RED	1
3	CONTACT PIN	BRASS	SILVER	1
2	INSULATOR	TEFLON	NATURAL	1
1	BODY	BRASS	NEXCOTE	1

UNLESS OTHERWISE SPECIFIED DIMENSIONS ARE IN MILLIMETERS. DIMENSIONS IN [ ] ARE IN INCHES AND FOR CUSTOMER REFERANCE ONLY.

UNLESS OTHERWISE SPECIFIED TOLERANCES FOR MILLIMETERS ARE:
0.5 – 8mm ± 0.20mm
8 – 30mm ± 0.40mm
30 – 120mm ± 0.50mm

UNLESS OTHERWISE SPECIFIED TOLERANCES FOR INCHES ARE:
.020 – .315 = ± 0.007"
.315 – 1.180 = ± 0.015"
1.180 – 4.724 = ± 0.020"

DO NOT SCALE DRAWING

APPROVALS		DATE
DRAWN	G.R.S.	12/17/06
CHECKED		
ISSUED		
SHEET	1 OF 1	

CAD FILE C:/272/272107.DWG

Amphenol Connex

PART DESCRIPTION
7/16 STRAIGHT PLUG
(FOR LMR400, BELDEN 9913 CABLE)

PART NO. 272107

DWG. NO. 272107.DWG | REV. D | SIZE A | SCALE NA