REV.	DATE	DESCRIPTION
NC	08/29/02	INITIAL RELEASE

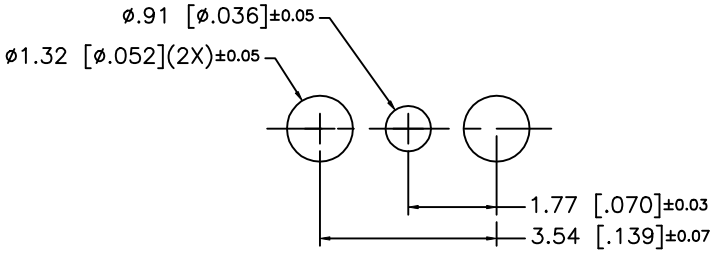

PCB MOUNTING HOLE

PATTERN

LAND (FREE OF SOLDER MASK)

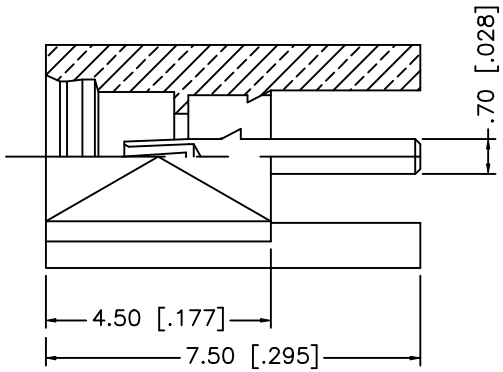

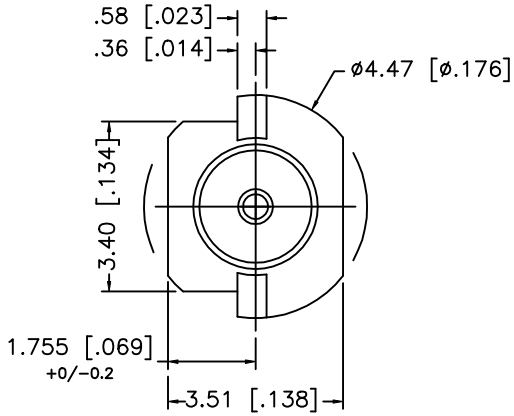

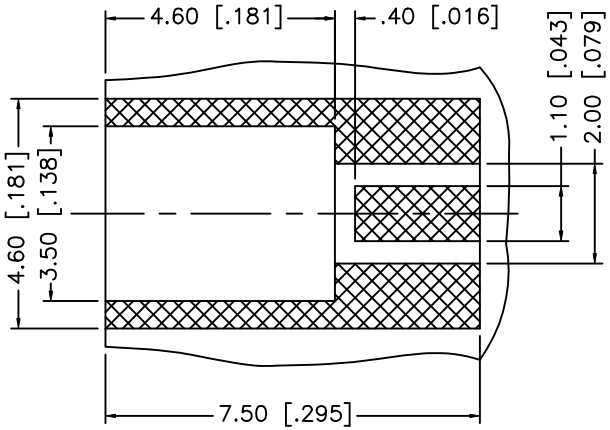

RECOMMENDED
MOUNTING HOLE

	DESCRIPTION	MATERIAL	FINISH
8			
7			
6			
5			
4			
3	CONTACT PIN	BER. COPPER	GOLD
2	INSULATOR	TEFLON	NATURAL
1	BODY	BRASS	GOLD

UNLESS OTHERWISE SPECIFIED DIMENSIONS ARE IN MILLIMETERS

DIMENSIONS IN [ ] ARE IN INCHES FOR CUSTOMER REFERANCE ONLY

UNLESS OTHERWISE SPECIFIED TOLERANCES FOR INCHES ARE:

.XXX = ± 0.005"
.XX = ± 0.010"
.X = ± 0.020"

DO NOT SCALE DRAWING

APPROVALS		DATE
DRAWN	G.R.S.	08/29/02
CHECKED		
ISSUED		

Amphenol - Connex
CONNECTOR CORPORATION

TITLE: MMCX EDGECARD JACK

SIZE	FSCM NO.	DWG. NO.	REV.
A	99001	262107.DWG	NC

SCALE	PART NO.	SHEET
NA	262107	1 OF 1