REV.	DATE	DESCRIPTION
NC	05/20/02	INITIAL RELEASE
A	04/11/06	UPDATE DRAWING FORMAT

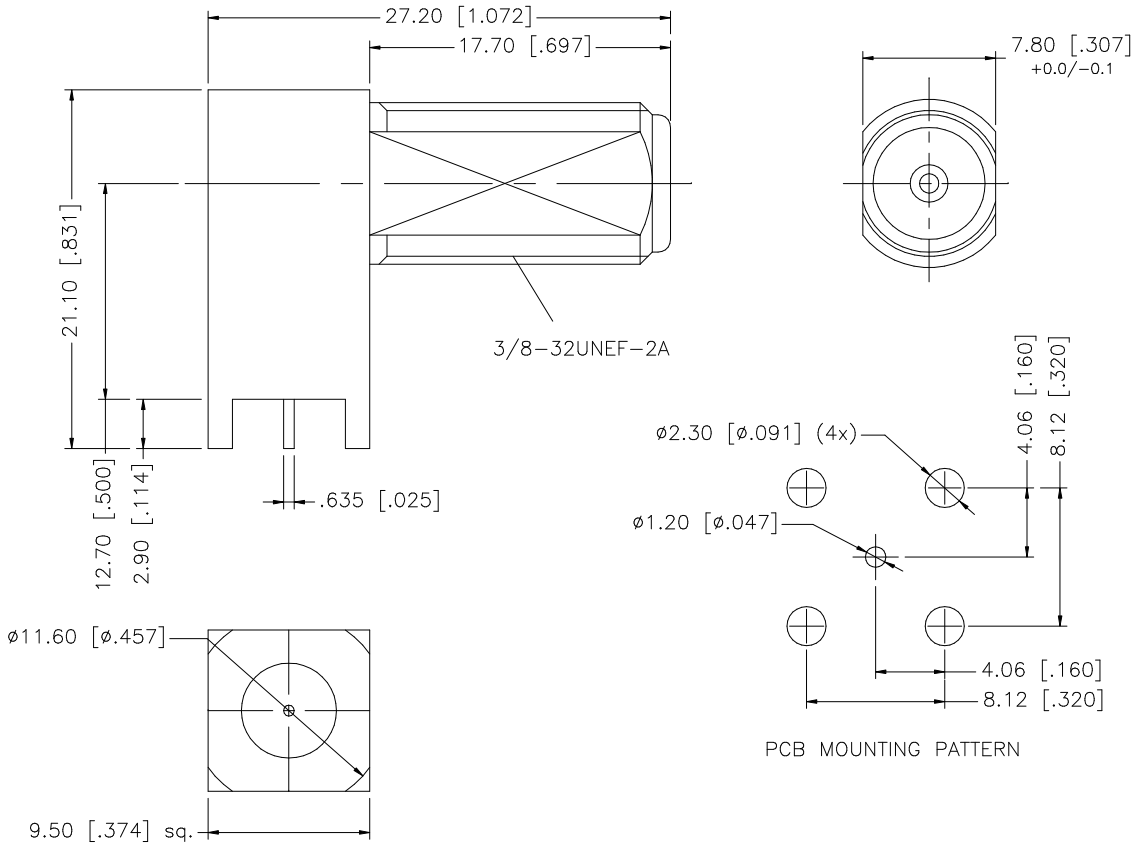

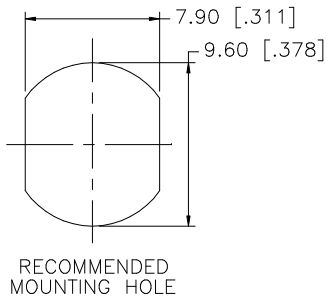

NOTES;

1. ACCEPTS ø0.5~1.05 CENTER CONDUCTOR TYPICAL.
2. RETURN LOSS –15db MIN. AT 2 GHz.
3. TIN–LEAD (90/100) PL. 100 MIN. THICK OVER NICKEL PL. 50 MIN.

	DESCRIPTION	MATERIAL	FINISH	QTY
8				
7				
6	INSULATOR	TEFLON	NATURAL	1
5	CONTACT PIN	BRASS	GOLD	1
4	INSULATOR	TEFLON	NATURAL	1
3	CONTACT PIN	BER. COPPER	GOLD	1
2	INSULATOR	TEFLON	BRT. TIN	1
1	BODY	BRASS	BRT. TIN	1

UNLESS OTHERWISE SPECIFIED DIMENSIONS ARE IN MILLIMETERS. DIMENSIONS IN [ ] ARE IN INCHES AND FOR CUSTOMER REFERANCE ONLY.

UNLESS OTHERWISE SPECIFIED TOLERANCES FOR MILLIMETERS ARE:
0.5 – 8mm ± 0.20mm
8 – 30mm ± 0.40mm
30 – 120mm ± 0.50mm

UNLESS OTHERWISE SPECIFIED TOLERANCES FOR INCHES ARE:
.020 – .315 = ± 0.007"
.315 – 1.180 = ± 0.015"
1.180 – 4.724 = ± 0.020"

DO NOT SCALE DRAWING

APPROVALS		DATE
DRAWN	G.R.S.	04/11/06
CHECKED		
ISSUED		
SHEET	1 OF 1	

CAD FILE C:/222/1222180.DWG

Amphenol Connex

PART DESCRIPTION
F R/A PC MOUNT RECEPTACLE
(HIGH PERFORMANCE)

PART NO. 222180

DWG. NO.	REV.	SIZE	SCALE
222180.DWG	A	A	NA