REV.	DATE	DESCRIPTION
A	05/29/03	UPDATE DRAWING FORMAT

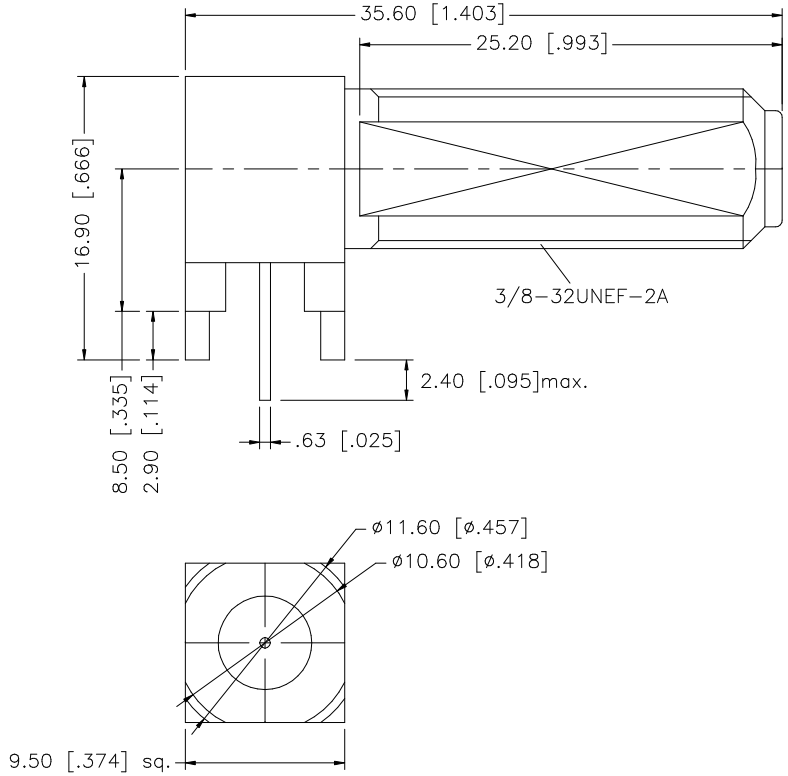

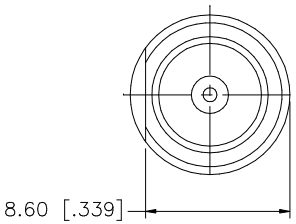

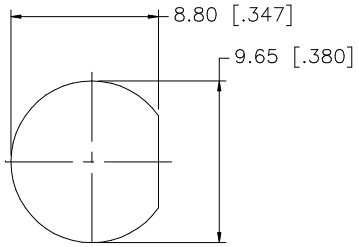

PANEL CUTOUT

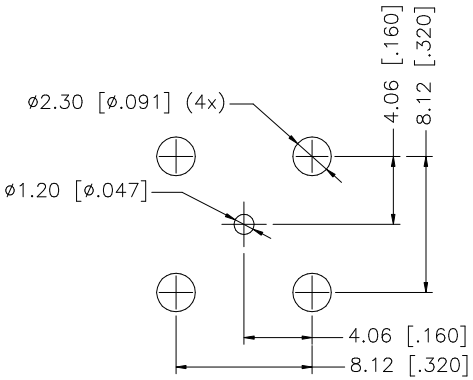

PCB MOUNTING PATTERN

NOTE:
1. REF: HUGHS 1016844-0001
2. BER. COPPER PLATING PER QQ-C-530

	DESCRIPTION	MATERIAL	FINISH	QTY
8				
7				
6				
5	INSULATOR	DELRIN	NATURAL	1
4	INSULATOR	POLY PRO	NATURAL	1
3	CONTACT PIN	BER. COPPER	BRT. TIN	1
2	CONTACT PIN	BRASS	BRT. TIN	1
1	BODY	BRASS	NICKEL	1

UNLESS OTHERWISE SPECIFIED DIMENSIONS ARE IN MILLIMETERS. DIMENSIONS IN [ ] ARE IN INCHES AND FOR CUSTOMER REFERANCE ONLY.

UNLESS OTHERWISE SPECIFIED TOLERANCES FOR MILLIMETERS ARE:
0.5 – 8mm ± 0.20mm
8 – 30mm ± 0.40mm
30 – 120mm ± 0.50mm

UNLESS OTHERWISE SPECIFIED TOLERANCES FOR INCHES ARE:
.020 – .315 = ± 0.007"
.315 – 1.180 = ± 0.015"
1.180 – 4.724 = ± 0.020"

DO NOT SCALE DRAWING

APPROVALS		DATE
DRAWN	G.R.S.	05/29/03
CHECKED		
ISSUED		
SHEET	1 OF 1	
CAD FILE	C:/222/222182-10.DWG	

Amphenol Connex

PART DESCRIPTION: F SERIES R/A PCS RECEPTACLE

PART NO. 222128-10

DWG. NO. 222128-10.DWG | REV. A | SIZE A | SCALE NA