REV.	DATE	DESCRIPTION
A	03/06/05	MODIFY PLATING SPECS.
B	10/27/05	MODIFY PLATING SPECS. TO BRT. TIN
C	03/16/06	CHANGE CABLE DESCRIPTION TO RG 179/U

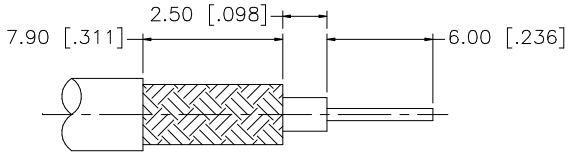

RECOMMENDED CABLE
STRIPPING DIM'S

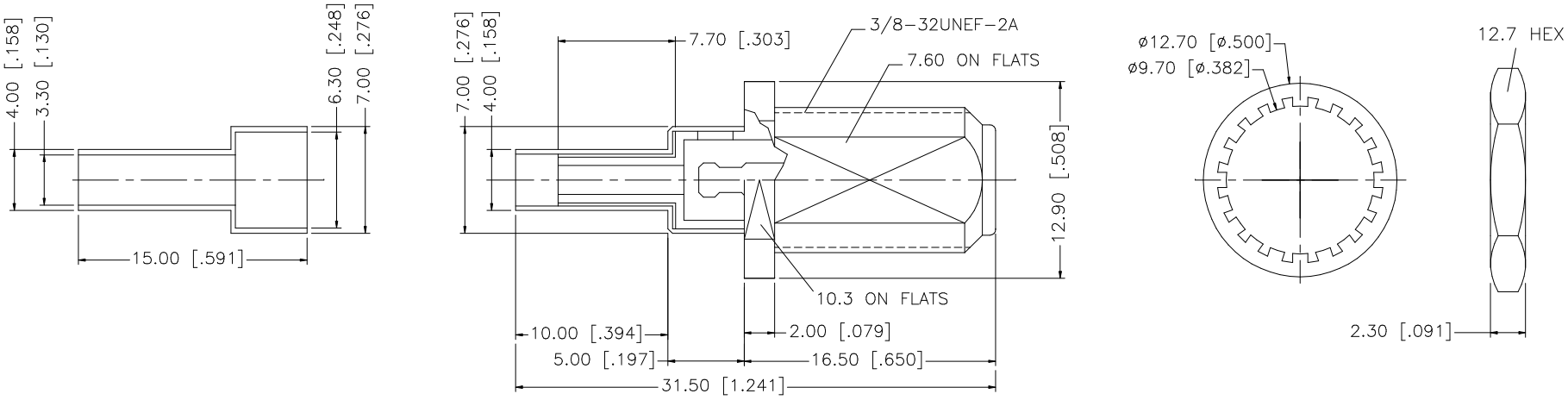

CRIMP NOTES:

1. CRIMPED FERRULE
   HEX CRIMP SIZE .128"
2. CONTACT PIN TO SOLDER
3. MAX. PANEL THICKNESS = 4.5mm

	DESCRIPTION	MATERIAL	FINISH	QTY
8				
7	FERRULE	BRASS	BRT. TIN	1
6	HEX NUT	BRASS	BRT. TIN	1
5	LOCK WASHER	BRASS	BRT. TIN	1
4	INSULATOR	P.P.	NATURAL	1
3	CONTACT PIN	BRASS	BRT-TIN	1
2	INSULATOR	P.P.	NATURAL	1
1	HOUSING/BODY	BRASS	BRT. TIN	1

UNLESS OTHERWISE SPECIFIED DIMENSIONS ARE IN MILLIMETERS. DIMENSIONS IN [ ] ARE IN INCHES AND FOR CUSTOMER REFERANCE ONLY.

UNLESS OTHERWISE SPECIFIED TOLERANCES FOR MILLIMETERS ARE:
0.5 – 8mm ± 0.20mm
8 – 30mm ± 0.40mm
30 – 120mm ± 0.50mm

UNLESS OTHERWISE SPECIFIED TOLERANCES FOR INCHES ARE:
.020 – .315 = ± 0.007"
.315 – 1.180 = ± 0.015"
1.180 – 4.724 = ± 0.020"

DO NOT SCALE DRAWING

APPROVALS		DATE
DRAWN	G.R.S.	03/16/06
CHECKED		
ISSUED		
SHEET	1 OF 1	

CAD FILE C:/222/222114-10.DWG

Amphenol Connex

PART DESCRIPTION
F BULKHEAD CRIMP JACK
(FOR RG179/U WITH NUT AND WASHER)

PART NO. 222114-10

DWG. NO. 222114-10.DWG | REV. C | SIZE A | SCALE NA