19434

STRIP MATERIAL NUMBER	LOOSE PIECE MATERIAL NUMBER	AWG SIZE	FINISH	DIM. "A"	DIM. "B"	DIM. "C"	DIM. "D"
194340001	194340003	10-12	PREPLATED TIN 75μ" MIN THICK OVER NICKEL FLASH	.250/6.35	.236/6.00	.197/5.00	.220/5.60
194340002	194340004	8		N/A	N/A	.240/6.10	.276/7.00

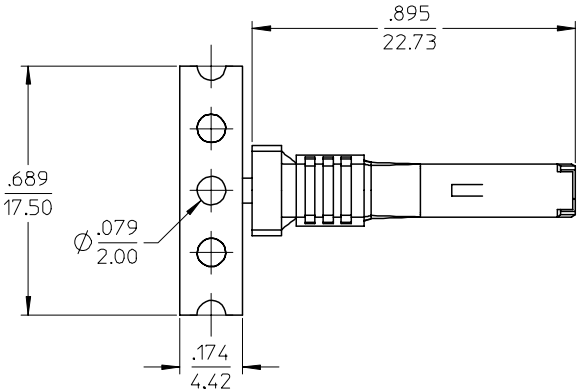

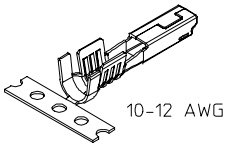

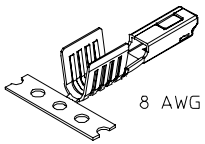

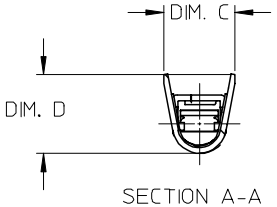

SECTION A-A

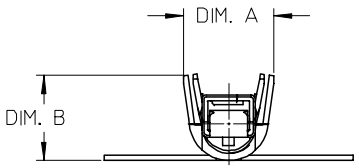

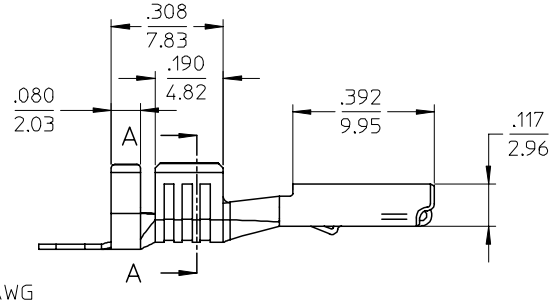

10-12 AWG

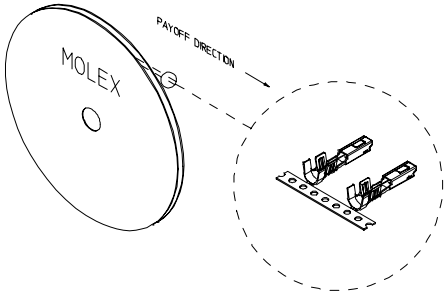

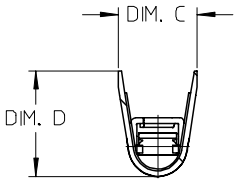

SECTION B-B

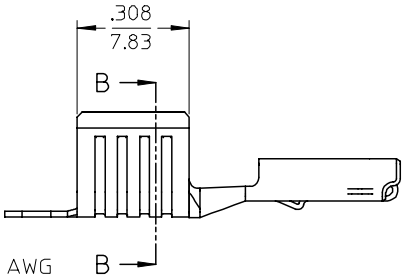

8 AWG
SAME AS 10-12 AWG
EXCEPT AS NOTED

NOTES:
1. MATERIAL: COPPER ALLOY .015/0.38 THK.
2. FINISH: SEE CHART.
3. TERMINALS FOR USE WITH 19432**** RECEPTACLE HOUSING ASSEMBLY.
4. STRIP TERMINALS ARE REELED AS SHOWN ABOVE ON 24" REELS, 2500 PARTS PER REEL. (A)
5. LOOSE TERMINALS ARE BULK PACKAGED IN QUANTITIES OF 700. (A)
6. APPLICATION TOOLING AND CRIMP SPECIFICATIONS: CONSULT FACTORY

EC NO: ETC2005-0223
DRWN:BRUPERT 2005/09/01
CHKD:JPAWLICK2005/09/02
APPR:RDEROSS 2005/09/06
DESCRIPTION
REV A

QUALITY SYMBOLS
▼ = 0
(C) = 0

GENERAL TOLERANCES (UNLESS SPECIFIED)

	mm	INCH
4 PLACES	± ---	± ---
3 PLACES	± ---	± .010
2 PLACES	± 0.25	± .02
1 PLACE	± 0.5	± ---
ANGULAR ± 3 °		

DRAFT WHERE APPLICABLE
MUST REMAIN WITHIN DIMENSIONS

SCALE 4:1
DESIGN UNITS INCH
DIMENSION STYLE IN/MM
DRAWN BY BRUPERT DATE 01/25/05
CHECKED BY JPAWLICK DATE 01/25/05
APPROVED BY RDEROSS DATE 01/25/05

THIRD ANGLE PROJECTION
REVISE ON CAD ONLY

TITLE
FEMALE RECEPTACLE MX150L TERMINAL, 10-12,8 AWG AWG, .098/2.50X.031/0.79

molex MOLEX INCORPORATED

MATERIAL NO. SEE CHART
DOCUMENT NO. SD-19434-001
SHEET NO. 1 OF 1

THIS DRAWING CONTAINS INFORMATION THAT IS PROPRIETARY TO MOLEX INCORPORATED AND SHOULD NOT BE USED WITHOUT WRITTEN PERMISSION

C

tb_frame_C-B1
rev. B1 2000/08/01