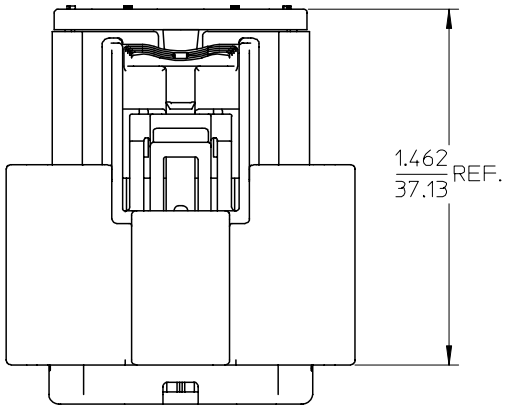

194180023	16-14	NO
194180022	22-18	
194180002	16-14	YES
194180001	22-18	
MATERIAL NUMBER	UL WIRE AWG	CPA

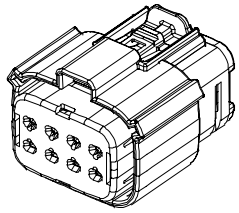

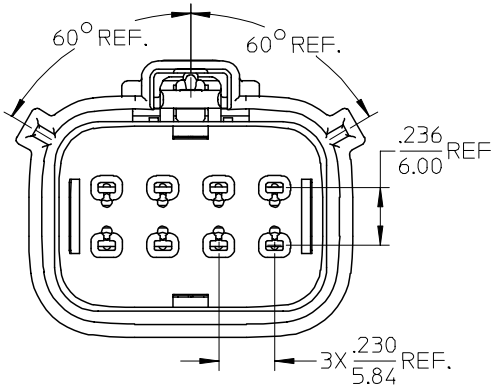

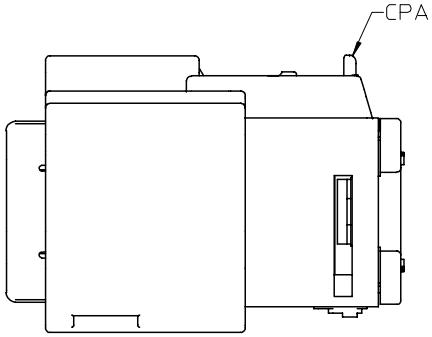

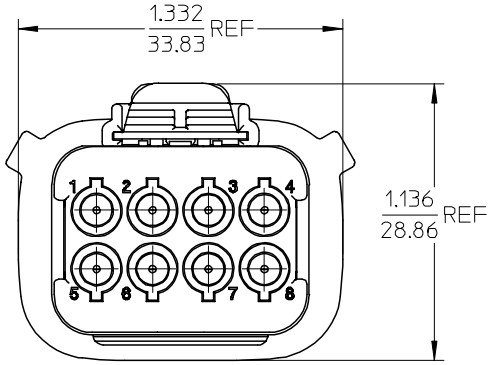

NOTES:

1. MATERIALS:
   HOUSING: POLYESTER (PBT), GLASS FILLED, UL94 V-0,
   COLOR: BLACK.
   SEALS: SILICONE RUBBER.
2. PRODUCT SPECIFICATION: PS-19417-001.
3. PACKAGING SPECIFICATION: PK-19418-001.
4. MATES WITH: 19419 SERIES PLUG ASSEMBLIES.
5. USE CONNECTOR WITH FEMALE CRIMP TERMINAL SERIES 19420.

REVISED			DESCRIPTION
EC NO:	DRWN: JPAWLICK	2005/08/30	
	CH'KD: JPAWLICK	2005/09/12	
B1	APPR: JPAWLICK	2005/09/12	

REV

QUALITY SYMBOLS
▼=0
▽=0

GENERAL TOLERANCES (UNLESS SPECIFIED)	mm	INCH
4 PLACES	± ---	± ---
3 PLACES	± ---	± .015
2 PLACES	± 0.38	± ---
1 PLACE	± ---	± ---
ANGULAR ± 1 °		

DRAFT WHERE APPLICABLE MUST REMAIN WITHIN DIMENSIONS

DIMENSION STYLE	IN/MM
SCALE	1:1
DESIGN UNITS	INCH
	THIRD ANGLE PROJECTION
DRAWN BY	BRUPERT
DATE	12/06/02
CHECKED BY	JPAWLICK
DATE	12/06/02
APPROVED BY	RDEROSS
DATE	12/06/02
TITLE	8 WAY RECEPTACLE ASSEMBLY, KEY A POLARIZATION
	MOLEX INCORPORATED
MATERIAL NO.	SEE CHART
DOCUMENT NO.	SD-19418-003
SHEET NO.	1 OF 1
SIZE	B

THIS DRAWING CONTAINS INFORMATION THAT IS PROPRIETARY TO MOLEX INCORPORATED AND SHOULD NOT BE USED WITHOUT WRITTEN PERMISSION