UNPLATED MATERIAL NUMBER	UNPLATED ENG. NUMBER	UNPLATED MAT. NO. ON TAPE	UNPLATED ENG. NO. ON TAPE	PLATED MATERIAL NUMBER	PLATED ENGINEERING NUMBER	PLATED MAT. NO. ON TAPE	PLATED ENG. NO ON TAPE	SEE DETAIL	STUD SIZE	AWG WIRE RANGE	"S" ±.010/(0.25)	"L" ±.030/(0.76)	"W" ±.020/(0.50)	"C" ±.040/(1.02)	"B" ±.015/(0.38)	"T" ±.015/(0.38)
192210451	BCL-410	---	---	192210452	BCL-410-PL	---	---	---	10/(4.83)	4	.214/(5.45)	1.500/(38.10)	.531/(13.49)	.429/(10.90)	.286/(7.26)	.080/(2.03)
192210404	BCL-414	---	---	192210230	BCL-414-PL	---	---	---	1/4/(6.4)	4	.278/(7.06)	1.500/(38.10)	.531/(13.49)	.429/(10.90)	.286/(7.26)	.080/(2.03)
192210405	BCL-4516	---	---	192210231	BCL-4516-PL	190820025	BCL-4516-PLT	D	5/16/(7.9)	4	.340/(8.64)	1.500/(38.10)	.531/(13.49)	.429/(10.90)	.286/(7.26)	.080/(2.03)
192210461	BCL-4516-WP	---	---	192210460	BCL-4516-WP-PL	---	---	---	5/16/(7.9)	4	.340/(8.64)	1.531/(38.89)	.625/(15.88)	.397/(10.08)	.286/(7.26)	.080/(2.03)
192210383	BCL-438	---	---	192210232	BCL-438-PL	190820026	BCL-438-PLT	E	3/8/(9.5)	4	.400/(10.16)	1.500/(38.10)	.531/(13.49)	.429/(10.90)	.286/(7.26)	.080/(2.03)
192210458	BCL-438-WP	---	---	192210456	BCL-438-WP-PL	190820027	BCL-438-WP-PLT	E	3/8/(9.5)	4	.400/(10.16)	1.531/(38.89)	.625/(15.88)	.397/(10.08)	.286/(7.26)	.080/(2.03)
192210459	BCL-438-XWP	---	---	192210457	BCL-438-XWP-PL	---	---	---	3/8/(9.5)	4	.400/(10.16)	1.688/(42.88)	.766/(19.46)	.444/(11.28)	.286/(7.26)	.100/(2.54)
192210453	BCL-412	---	---	192210454	BCL-412-PL	---	---	---	1/2/(12.7)	4	.520/(13.21)	1.688/(42.88)	.766/(19.46)	.444/(11.28)	.286/(7.26)	.100/(2.54)
192210419	BCL-214	---	---	192210418	BCL-214-PL	190820001	BCL-214-PLT	C	1/4/(6.4)	2	.278/(7.06)	1.625/(41.28)	.625/(15.88)	.437/(11.10)	.336/(8.53)	.095/(2.41)
192210400	BCL-2516	---	---	192210233	BCL-2516-PL	190820002	BCL-2516-PLT	C	5/16/(7.9)	2	.340/(8.63)	1.625/(41.28)	.625/(15.88)	.437/(11.10)	.336/(8.53)	.095/(2.41)
192210380	BCL-238	---	---	192210235	BCL-238-PL	---	---	---	3/8/(9.5)	2	.400/(10.16)	1.625/(41.28)	.625/(15.88)	.437/(11.10)	.336/(8.53)	.095/(2.41)
192210564	BCL-238-WP	---	---	192210565	BCL-238-WP-PL	---	---	---	3/8/(9.5)	2	.400/(10.16)	1.750/(44.45)	.750/(19.05)	.474/(12.04)	.336/(8.53)	.095/(2.41)
192210399	BCL-212-WP	---	---	192210236	BCL-212-WP-PL	---	---	---	1/2/(12.7)	2	.520/(13.21)	1.750/(44.45)	.750/(19.05)	.474/(12.04)	.336/(8.53)	.095/(2.41)
192210594	BCL-110	---	---	192210595	BCL-110-PL	---	---		#10/(4.83)	1	.214/(5.45)	1.718/(43.64)	.656/(16.66)	.446/(11.33)	.360/(9.14)	.100/(2.54)
192210421	BCL-114	---	---	192210420	BCL-114-PL	---	---	---	1/4/(6.4)	1	.278/(7.06)	1.718/(43.64)	.656/(16.66)	.446/(11.33)	.360/(9.14)	.100/(2.54)
192210396	BCL-1516	---	---	192210237	BCL-1516-PL	---	---	---	5/16/(7.9)	1	.340/(8.63)	1.718/(43.64)	.656/(16.66)	.446/(11.33)	.360/(9.14)	.100/(2.54)
192210378	BCL-138	---	---	192210238	BCL-138-PL	---	---	---	3/8/(9.5)	1	.400/(10.16)	1.718/(43.64)	.656/(16.66)	.446/(11.33)	.360/(9.14)	.100/(2.54)
192210580	BCL-138-WP	---	---	192210581	BCL-138-WP-PL	---	---	---	3/8/(9.5)	1	.400/(10.16)	1.844/(46.84)	.750/(19.05)	.474/(12.04)	.360/(9.14)	.100/(2.54)
192210395	BCL-112	---	---	192210239	BCL-112-PL	---	---	---	1/2/(12.7)	1	.520/(13.21)	1.844/(46.84)	.750/(19.05)	.474/(12.04)	.360/(9.14)	.100/(2.54)

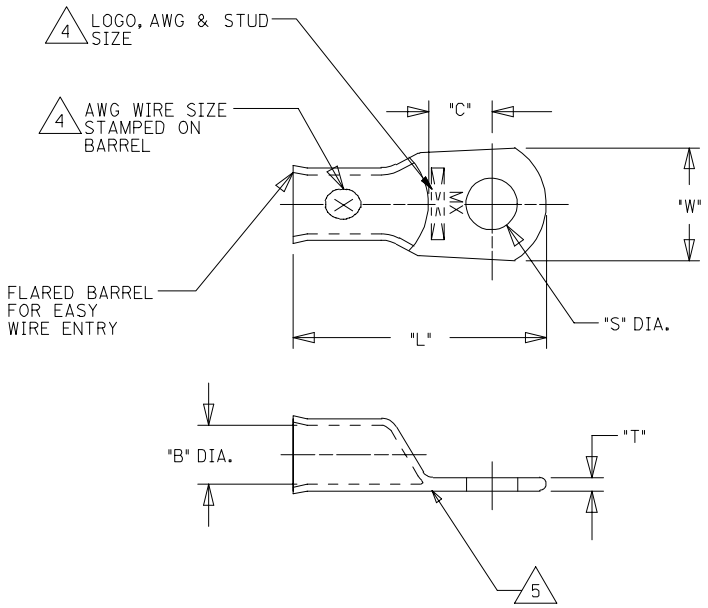

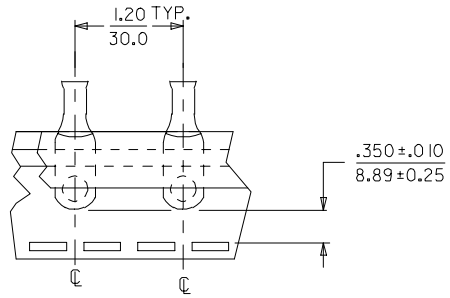

DETAIL C

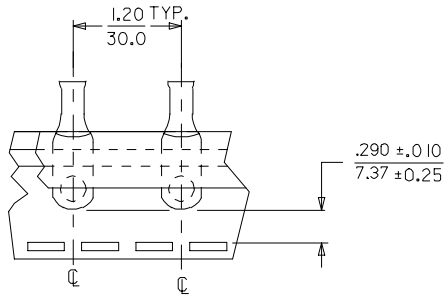

DETAIL D

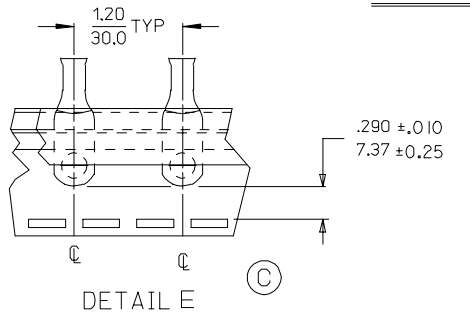

DETAIL E

NOTES:
1. FOR INSPECTION SIGHT HOLE, PLEASE CONSULT FACTORY.
2. OTHER STUD SIZES MAY BE AVAILABLE, PLEASE CONSULT FACTORY.
3. MATERIAL: COPPER
   PLATING: TIN
4. MARKINGS CAN BE AT EITHER LOCATION SHOWN.
5. IF TONGUE IS TO BE BENT AT ANY ANGLE, IT MUST BE BENT AROUND A RADIUS ONE HALF THE TONGUE THICKNESS.

REV	DESCRIPTION
C	ADDED DETAIL E EC NO: ETC2006-0005 2005/11/23 DRWN:LSHADECK 2005/11/23 CHKD:RDEROSS 2005/11/23 APPR:JPAWLICK 2005/11/23

QUALITY SYMBOLS: ▼=0 ; (C)=0

GENERAL TOLERANCES (UNLESS SPECIFIED)

	mm	INCH
4 PLACES	± ---	± ---
3 PLACES	± ---	± ---
2 PLACES	± ---	± ---
1 PLACE	± ---	± ---
ANGULAR ±---°		

DRAFT WHERE APPLICABLE MUST REMAIN WITHIN DIMENSIONS

DIMENSION STYLE: IN/MM

SCALE: ---

DESIGN UNITS: INCH

THIRD ANGLE PROJECTION

		DATE
DRAWN BY	BE	06/26/02
CHECKED BY	HB	06/26/02
APPROVED BY	RD	06/26/02

TITLE: EYELET STYLE COPPER TERMINALS 4, 2, & 1 AWG LUGS

molex MOLEX INCORPORATED

MATERIAL NO.: SEE CHART

DOCUMENT NO.: SD-19221-010

SHEET NO.: 1 OF 1

SIZE: C

THIS DRAWING CONTAINS INFORMATION THAT IS PROPRIETARY TO MOLEX INCORPORATED AND SHOULD NOT BE USED WITHOUT WRITTEN PERMISSION