19073

MATERIAL NUMBER	ENG. NO.	MATERIAL NUMBER TAPE MOUNTED	ENG. NO.	STUD SIZE	"S" ±.005	"W" MAX	"C" MIN	"L" MAX
190730179	C-830-10	190730180	C-830-10T	10	.198 (5.03)	.540 (13.72)	.393 (9.98)	1.258 (31.95)
190730188	C-830-14	190730190	C-830-14T	14	.265 (6.73)			
190730200	C-830-56	190730201	C-830-56T	56	.328 (8.33)			
190730212	C-836-04	190730213	C-836-04T	04	.119 (3.02)	.292 (7.42)	.306 (7.77)	1.047 (26.59)
190730216	C-836-06	190730218	C-836-06T	06	.146 (3.71)			
190730222	C-836-08	190730224	C-836-08T	08	.173 (4.39)			
190730227	C-840-10	190730228	C-840-10T	10	.198 (5.03)	.602 (15.29)	.466 (11.83)	1.362 (34.59)
190730231	C-840-14	190730232	C-840-14T	14	.265 (6.73)			
190730236	C-840-38	190730237	C-840-38T	38	.390 (9.91)			
190730242	C-840-56	190730243	C-840-56T	56	.328 (8.33)			

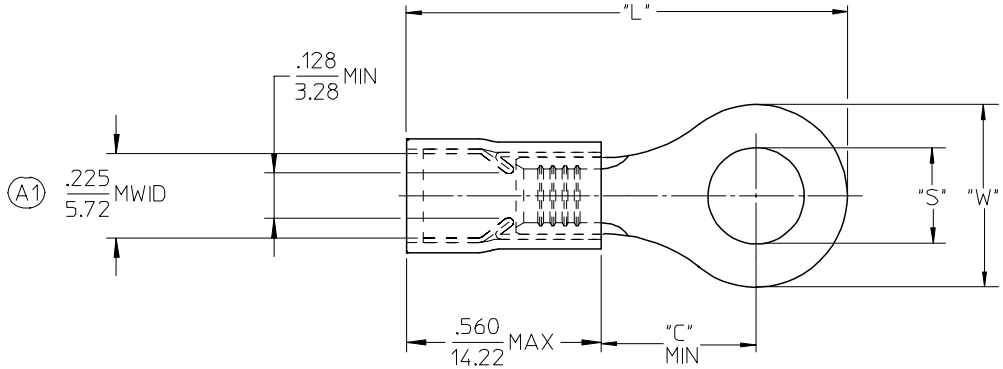

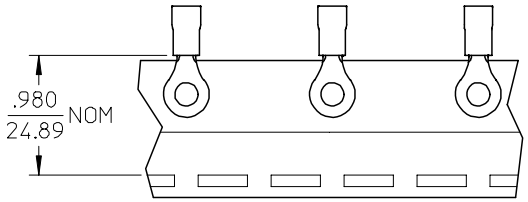

SALES DRAWING

NOTES:
1. MATERIAL: COPPER (.040/1.02) THICK.
   PLATING: ELECTROPLATE TIN
2. FERRULE: TIN PLATED BRASS
3. INSULATION: YELLOW NYLON
4. MWID=MAXIMUM WIRE INSULATION DIA.
5. ALL DIMENSIONS IN INCHES (MM).
6. WIRE SIZE: 12-10 AWG
   4.0-6.0 MM²

EC NO: ETC2006-0152
DRWN: ASAYDEH 2005/12/12
CH'KD: JLOMASTRO 2005/12/13
APPR: RDEROSS 2005/12/14
DESCRIPTION
A1
REV

QUALITY SYMBOLS
▼ = 0
▽ (C) = 0

GENERAL TOLERANCES (UNLESS SPECIFIED)

	mm	INCH
4 PLACES	± ---	± ---
3 PLACES	± ---	± .005
2 PLACES	± 0.13	± .01
1 PLACE	± 0.25	± ---
ANGULAR ± 1 °		

DRAFT WHERE APPLICABLE
MUST REMAIN WITHIN DIMENSIONS

SCALE 4:1 | DESIGN UNITS INCH | THIRD ANGLE PROJECTION | REVISE ON CAD ONLY
DIMENSION STYLE IN/MM
DRAWN BY DMYRICK DATE 03/12/15
CHECKED BY SBEITZEL DATE 03/12/15
APPROVED BY RDEROSS DATE 03/12/15

TITLE
RING TONGUE TERMINAL
AVIKRIMP, 800-SERIES
12-10 AWG

molex MOLEX INCORPORATED

MATERIAL NO. SEE CHART | DOCUMENT NO. SD-19073-008 | SHEET NO. 1 OF 1

THIS DRAWING CONTAINS INFORMATION THAT IS PROPRIETARY TO MOLEX INCORPORATED AND SHOULD NOT BE USED WITHOUT WRITTEN PERMISSION

B

tb_frame_B
rev. B1 2000/08/01