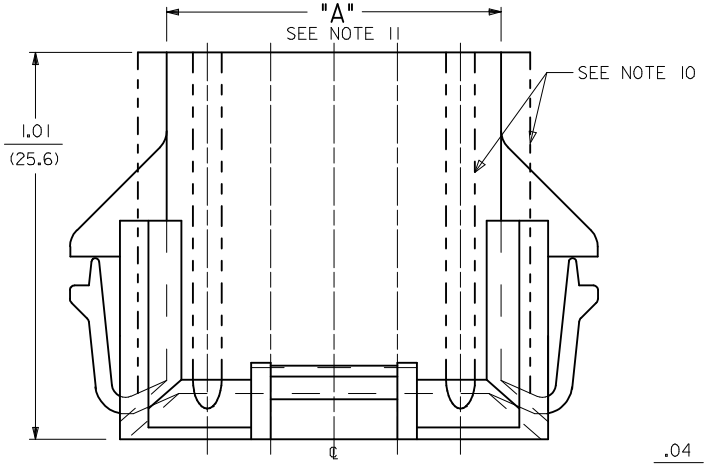

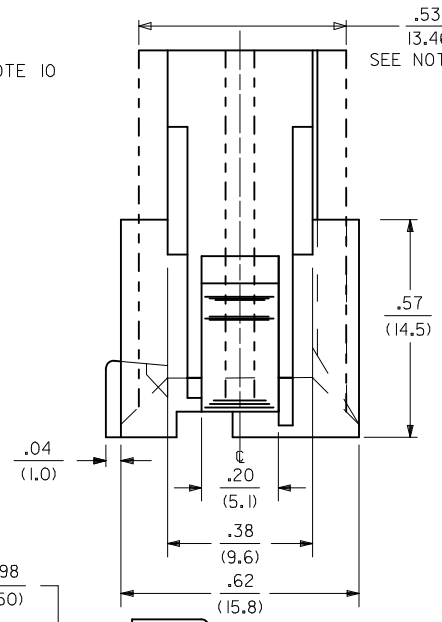

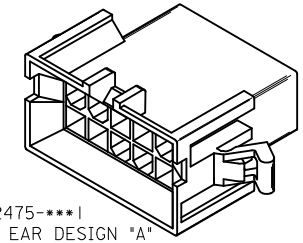

42475-***1
MOUNTING EAR DESIGN "A"
(SEE NOTE 9)

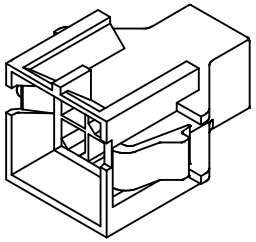

42475-***1
MOUNTING EAR DESIGN "B"
(SEE NOTE 9)

CIRCUIT SIZE	DIM. "A"	DIM. "B"	DIM. "C"	DIM. "D"
6	.54 (13.8)	.33 (8.4)	.807 (20.50)	.945 (24.00)
8	.71 (18.0)	.50 (12.6)	.972 (24.70)	1.110 (28.20)
10	.87 (22.2)	.66 (16.8)	1.138 (28.90)	1.276 (32.40)
12	1.04 (26.4)	.83 (21.0)	1.303 (33.10)	1.441 (36.60)
14	1.20 (30.6)	.99 (25.2)	1.469 (37.30)	1.606 (40.80)
16	1.37 (34.8)	1.16 (29.4)	1.643 (41.50)	1.772 (45.00)
18	1.54 (39.0)	1.32 (33.6)	1.799 (45.70)	1.937 (49.20)
20	1.70 (43.2)	1.49 (37.8)	1.965 (49.90)	2.102 (53.40)
22	1.87 (47.4)	1.65 (42.0)	2.130 (54.10)	2.268 (57.60)
24	2.03 (51.6)	1.82 (46.2)	2.295 (58.30)	2.433 (61.80)

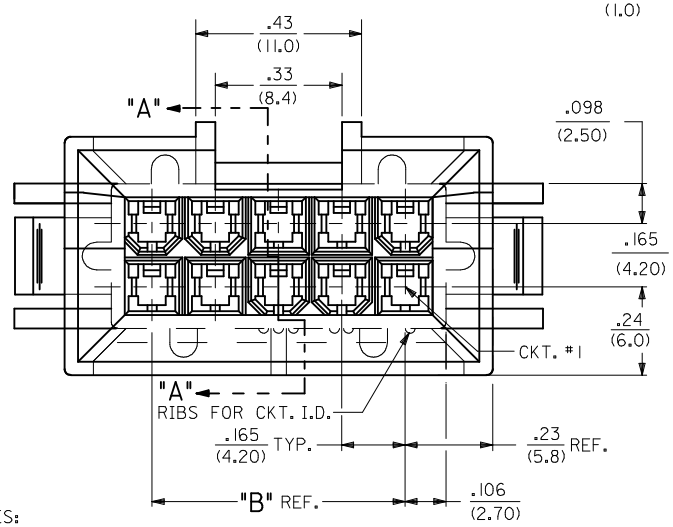

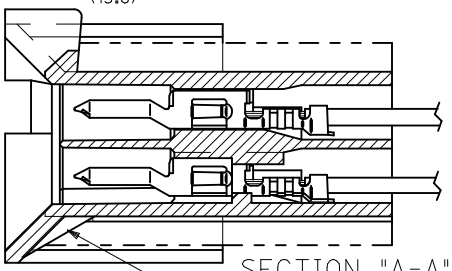

SECTION "A-A"
TERMINAL ORIENTATION

SEE NOTE #13

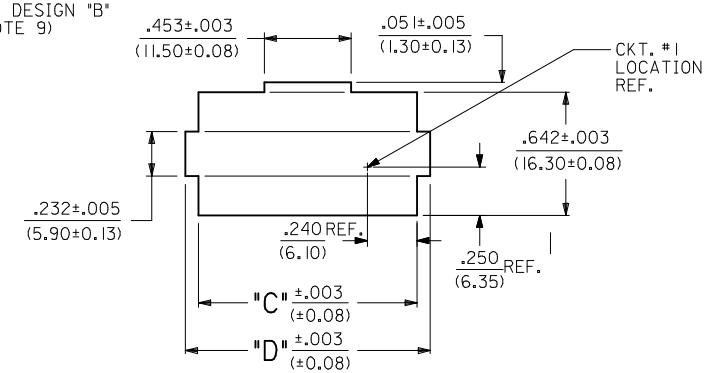

RECOMMENDED CUT-OUT FOR .063/(1.60)
MAX. THICK P.C. BOARD. (6-24 CKT'S.)

SCALE: 2X

NOTES:

1) MATERIAL:
   1 = NYLON (PA6/6), UNFILLED, UL94 V-2, COLOR: NATURAL
   2 = NYLON (PA6/6), UNFILLED, UL94 V-0, COLOR: NATURAL
   3 = NYLON (PA6/6), UNFILLED, UL94 V-2, COLOR: BLACK
   4 = NYLON (PA6/6), UNFILLED, UL94 V-0, COLOR: BLACK
2) FINISH NOT APPLICABLE.
3) THIS PART CONFORMS TO MOLEX PRODUCT SPEC. NO. PS-5556-002.
4) PACKAGING: PK-42474-001
5) 6-24 CKT. PARTS MATE WITH MOLEX RECEPTACLES 5557, 42385 AND 42474. 2 AND 4 CKT. PARTS MATE WITH 42385 AND 42474 ONLY.
6) PART IS FOR USE WITH MALE TERMINAL #5558.
7) PART ALLOWS FOR UP TO .100/(2.54) MISALIGNMENT WITH MATING RECEPTACLE IN ANY DIRECTION. SEE MATING CONNECTOR DRAWINGS FOR SPECIFIC ALLOWANCES.
8) PANEL CUT-OUT TO BE PUNCHED IN THE SAME DIRECTION AS CONNECTOR INSERTION.
9) PARTS MANUFACTURED AFTER 95/12/31 MAY HAVE MOUNTING EAR DESIGN "B" PARTS WITH MOUNTING EAR DESIGN "A" WILL BE OBSOLETED AS TOOL LIFE DICTATES. IN SOME CASES, PARTS MAY BE AVAILABLE WITH BOTH MOUNTING EAR DESIGNS. SEE CHART ON SHEET 4 FOR SPECIFIC EAR DESIGN AVAILABILITY.
10) FOR MANUFACTURING EASE PARTS MAY HAVE OPTIONAL EJECTOR RIBS. SEE SHT. 3 FOR LOCATION.
11) DIMENSION DOES NOT INCLUDE EJECTOR RIBS (SEE PAGE #3 FOR PARTS WITH RIBS, RIB DIMENSIONS AND LOCATION).
12) IF THIS PRODUCT IS STORED IN AN ENVIRONMENT WITH A RELATIVE HUMIDITY OF LESS THAN 50%, MOISTURE MUST BE ADDED. REFER TO TECHNICAL ADVISORY AS-45499-001 FOR INSTRUCTIONS.
13) INTERIOR RIB LOCATION MAY VARY.
14) CONNECTOR ASSEMBLIES ARE NOT TO BE MATED OR UNMATED WHILE CIRCUITS ARE LIVE.
15) WIRES ARE TO BE DRESSED IN SUCH A MANNER TO ALLOW THE TERMINALS TO FLOAT FREELY IN THE POCKET.
16) PART CONFORMS TO CLASS "B" REQUIREMENTS OF COSMETIC SPECIFICATION PS-45499-022.

SEE SHEET 2 FOR 2 & 4 CKT. PARTS

SHEET	REV
4	S1
3	S
2	S
1	S1

ADDED 50362323
EC NO: UCP2009-0892
DRWN: JKLOSTEMEIER 2008/10/09
CHKD: JBELL 2008/10/14
APPR: FSMITH 2008/10/15
DESCRIPTION
S1
REV

QUALITY SYMBOLS
▼=0
▽C=0

GENERAL TOLERANCES (UNLESS SPECIFIED)

	mm	INCH
4 PLACES	± ---	± ---
3 PLACES	± ---	± .010
2 PLACES	± 0.25	± .015
1 PLACE	± 0.38	± ---
ANGULAR ±1/2°		

DRAFT WHERE APPLICABLE MUST REMAIN WITHIN DIMENSIONS

DIMENSION STYLE: IN/MM
SCALE: 4:1
DESIGN UNITS: METRIC
THIRD ANGLE PROJECTION

DRAWN BY: GEP DATE: 1989/07/18
CHECKED BY: RJF DATE: 1989/07/18
APPROVED BY: RAS DATE: 1989/07/18

TITLE: PLUG HOUSING B.M.I. 2-24 CIRCUITS MINI-FIT SERIES

molex MOLEX INCORPORATED

MATERIAL NO.: SEE SHEET 4
DOCUMENT NO.: SD-42475-***1
SHEET NO.: 1 OF 4
SIZE: C

THIS DRAWING CONTAINS INFORMATION THAT IS PROPRIETARY TO MOLEX INCORPORATED AND SHOULD NOT BE USED WITHOUT WRITTEN PERMISSION

PART NUMBER	ENG. NUMBER	CKT. SIZE	MATERIAL (SEE NOTE 1.)
NOT TOOLED	42475-0211	2	1
15-06-0045	42475-0411	4	
15-06-0065	42475-0611	6	
15-06-0085	42475-0811	8	
15-06-0105	42475-1011	10	
NOT TOOLED	42475-1211	12	
15-06-0145	42475-1411	14	
NOT TOOLED	42475-1611	16	
15-06-0185	42475-1811	18	
15-06-0205	42475-2011	20	
NOT TOOLED	42475-2211	22	
15-06-0245	42475-2411	24	1
NOT TOOLED	42475-0221	2	2
15-06-0046	42475-0421	4	
15-06-0066	42475-0621	6	
50-36-2323	42475-0821	8	
15-06-0106	42475-1021	10	
NOT TOOLED	42475-1221	12	
15-06-0146	42475-1421	14	
NOT TOOLED	42475-1621	16	
15-06-0186	42475-1821	18	
15-06-0206	42475-2021	20	
NOT TOOLED	42475-2221	22	
15-06-0246	42475-2421	24	2

PART NUMBER	CKT. SIZE	MATERIAL (SEE NOTE 1.)
	2	3
42475-0431	4	
42475-0631	6	
42475-0831	8	
42475-1031	10	
	12	
42475-1431	14	
	16	
42475-1831	18	
42475-2031	20	
	22	
42475-2431	24	3
	2	4
42475-0441	4	
	6	
	8	
42475-1041	10	
	12	
42475-1441	14	
	16	
42475-1841	18	
42475-2041	20	
	22	
42475-2441	24	4

MOUNTING EAR TYPE	
CKT. SIZE	DESIGN A, DESIGN B (SEE SHEET 1)
2	N/A
4	B
6	B
8	A
10	B
12	N/A
14	B
16	N/A
18	A & B
20	A
22	N/A
24	B

PLUG HOUSING/ MALE TERMINAL	MATING CONNECTOR	HSG. MAT'L.	TERM. MAT'L.	PLATING
		MATING CONNECTOR FEATURES		
42475-**21, 5558-GS*	42474-**21, 5556-PBGS*P	94V-0	PHOS. BRZ.	GOLD
42475-**11, 5558-GS*	42474-**11, 5556-PBGS*P	94V-2		
42475-**21, 5558-GS*	42474-**21, 5556-GS*P	94V-0	BRASS	GOLD
42475-**11, 5558-GS*	42474-**11, 5556-GS*P	94V-2		
42475-**21, 5558-PBS*	42474-**21, 5556-PBS*P	94V-0	PHOS. BRZ.	TIN
42475-**11, 5558-PBS*	42474-**11, 5556-PBS*P	94V-2		
42475-**21, 5558-S*	42474-**21, 5556-S*P	94V-0	BRASS	TIN
42475-**11, 5558-S*	42474-**11, 5556-S*P	94V-2		
42475-**21, 5558-GS*	A-42385-**D2	94V-0	PHOS. BRZ.	GOLD
42475-**11, 5558-GS*	A-42385-**C2	94V-2		
42475-**21, 5558-GS*	A-42385-**B2	94V-0	BRASS	GOLD
42475-**11, 5558-GS*	A-42385-**A2	94V-2		
42475-**21, 5558-PBS*	A-42385-**D1	94V-0	PHOS. BRZ.	TIN
42475-**11, 5558-PBS*	A-42385-**C1	94V-2		
42475-**21, 5558-S*	A-42385-**B1	94V-0	BRASS	TIN
42475-**11, 5558-S*	A-42385-**A1	94V-2		

LEGEND:

42475 - ** * 1

BASE NUMBER

CIRCUIT SIZE

MATERIAL (SEE NOTE 1.)

ADDED 50362323
EC NO: UCP2009-0892
DRWN: JKLOSTEMEIER 2008/10/09
CHKD: JBELL 2008/10/14
APPR: FSMITH 2008/10/15
DESCRIPTION
S1
REV

QUALITY SYMBOLS
▼=0
▽C=0

GENERAL TOLERANCES (UNLESS SPECIFIED)

	mm	INCH
4 PLACES	± ---	± ---
3 PLACES	± ---	± .010
2 PLACES	± 0.25	± .015
1 PLACE	± 0.38	± ---
ANGULAR ±1/2°		

DRAFT WHERE APPLICABLE MUST REMAIN WITHIN DIMENSIONS

DIMENSION STYLE: IN/MM
SCALE: 4:1
DESIGN UNITS: METRIC
THIRD ANGLE PROJECTION

DRAWN BY: GEP DATE: 1989/07/18
CHECKED BY: RJF DATE: 1989/07/18
APPROVED BY: RAS DATE: 1989/07/18

TITLE: PLUG HOUSING B.M.I. 2-24 CIRCUITS, MINI-FIT SERIES

molex MOLEX INCORPORATED

MATERIAL NO.: SEE CHART
DOCUMENT NO.: SD-42475-***1
SHEET NO.: 4 OF 4
SIZE: C

THIS DRAWING CONTAINS INFORMATION THAT IS PROPRIETARY TO MOLEX INCORPORATED AND SHOULD NOT BE USED WITHOUT WRITTEN PERMISSION