PART NUMBER	ITEM (1) BODY	ITEM (2) CONTACT	ITEM (3) INSULATOR
141-0593-001	STAINLESS STEEL GOLD PL .00005 MIN OVER NICKEL PL .00005 MIN OVER	BERYLLIUM COPPER GOLD PL .00005 MIN OVER NICKEL PL .00005 MIN OVER COPPER PL .00005 MIN	TEFLON

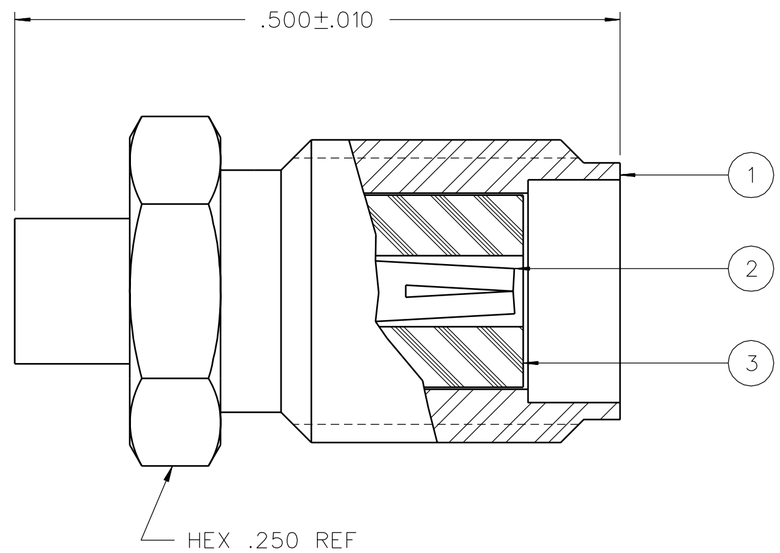

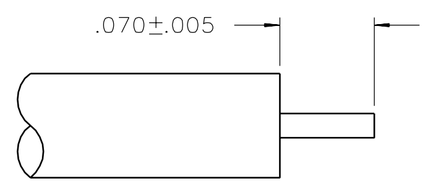

CABLE STRIP DIMENSIONS

NOTES:

1. SPECIFICATIONS:

IMPEDANCE: 50 OHMS
FREQUENCY RANGE: 0-26.5 GHZ
VSWR: 1.07+.008F MAX (F IN GHZ)(0-18 GHZ), 1.35 MAX (18-26.5 GHZ)
WORKING VOLTAGE: 335 VRMS MAX AT SEA LEVEL
DIELECTRIC WITHSTANDING VOLTAGE: 1000 VRMS MIN AT SEA LEVEL
INSULATION RESISTANCE: 5000 MEGOHM MIN
CONTACT RESISTANCE:
CENTER CONTACT - INITIAL 3.0 MILLIOHM MAX, AFTER ENVIRONMENTAL 4.0 MILLIOHM MAX
OUTER CONDUCTOR - INITIAL 2.0 MILLIOHM MAX AFTER ENVIRONMENTAL NOT APPLICABLE
BODY TO CABLE - 0.5 MILLIOHM MAX
CORONA LEVEL: 250 VOLTS MIN AT 70,000 FEET
INSERTION LOSS: $.03\sqrt{F}$ (F IN GHZ) AT 10 GHZ
RF LEAKAGE: -90 DB MIN AT 2.5 GHZ
RF HIGH POTENTIAL WITHSTANDING VOLTAGE: 670 VRMS MIN AT 4 AND 7 MHZ

MECHANICAL:

ENGAGE/DISENGAGE TORQUE: 2 IN-LBS MAX
MATING TORQUE: 7-10 IN-LBS
COUPLING PROOF TORQUE: NOT APPLICABLE
COUPLING NUT RETENTION: NOT APPLICABLE
CONTACT RETENTION: NOT APPLICABLE
CABLE ACCEPTABILITY: RG 405 DIA .086 SEMIRIGID
CABLE HEX CRIMP SIZE: NOT APPLICABLE
CABLE RETENTION: 30 LBS MIN AXIAL FORCE
16 INCH-OUNCE MIN TORQUE
DURABILITY: 500 CYCLES MIN

ENVIRONMENTAL:

(MEETS OR EXCEEDS THE APPLICABLE PARAGRAPH OF MIL-PRF-39012)
THERMAL SHOCK: MIL-STD-202, METHOD 107, CONDITION B, EXCEPT 115°C HIGH TEMP
OPERATING TEMPERATURE: -65°C TO 165°C
CORROSION: MIL-STD-202, METHOD 101, CONDITION B
SHOCK: MIL-STD-202, METHOD 213, CONDITION I
VIBRATION: MIL-STD-202, METHOD 204, CONDITION D
MOISTURE RESISTANCE: MIL-STD-202, METHOD 106

DRAWING NO.
C - 141-0593-001/010

0	REVISIONS					
ENGINEERING RELEASE						
01	09-18-89	EJ	GLD	RJB	AAW	10-05-89 ECO 24126
ADDED: 115° C HIGH TEMP TO THERMAL SHOCK SPEC.						
02	06-06-90	EJ	GLD	RJB	AAW	6-15-90 ECO 24431
CHANGED: 10 GHZ WAS 9-12.4 GHZ DELETED: .424+-010 ADDED: HEX .312 REF						
03	02-25-91	DB	RJB	AAW		2-26-91 ECO 24942
DELETED: "COPPER PL .00005 MIN"						
04	08-16-91	DB	RJB	HEM		8-16-91 ECO 40505
CHANGED: FREQ RANGE 0-26.5 GHZ WAS 0-18.0 GHZ, RF LEAK 2.5 GHZ WAS 2 TO 3 GHZ, RF HIGH POT 4 AND 7 MHZ WAS 5 TO 7.5 MHZ, UPDATED GRAPHICS						
5	3-15-94	RH	SWC	TAK	RJB	PAH 4-5-94 ECO 42354
VERSION UPDATE ********** * REVISION NUMBER FOLLOWED BY AN ALPHA * * CHARACTER INDICATES DRAWING CLARIFI- * * CATION OR PART NUMBER ADDITION ONLY. * **********						
5a	1-31-95	RH	RJB			ECN 43175
GRAPHICS & VERSION UPDATE						
6	12-15-05	PAT	SBD	PDW		5-12-06 ECN 50067

CUSTOMER DRAWING

THIS DRAWING TO BE INTERPRETED PER ASME Y 14.5M - 1994

"μSTATION"

COMPANY CONFIDENTIAL

TOLERANCE UNLESS OTHERWISE SPECIFIED		DRAWN BY Bedney	DATE 2-16-89	EMERSON Network Power	Connectivity Solutions P.O. Box 1732 Waseca, MN 56093 1-800-247-8256
DECIMALS .XX	mm	CHECKED BY	DATE	TITLE	JACK ASSEMBLY STRAIGHT CABLED SMA, RG 405
.XXX		APPROVED BY GLD/RJB	DATE 9-28-89		
MATL		RELEASE DATE	10-5-89	SHEET 2 OF 2	DRAWING NO. C - 141-0593-001/010
FINISH		U/M INCH	SCALE 10:1		