REV.	DATE	DESCRIPTION
A	01/30/04	UPDATE DRAWING FORMAT
B	10/05/04	MODIFY BODY HEX ORIENTATION

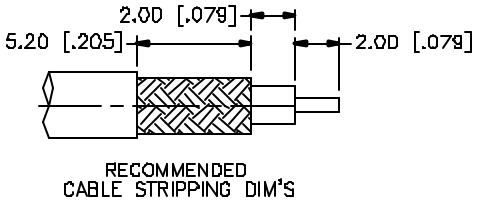

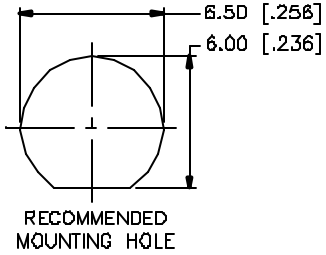

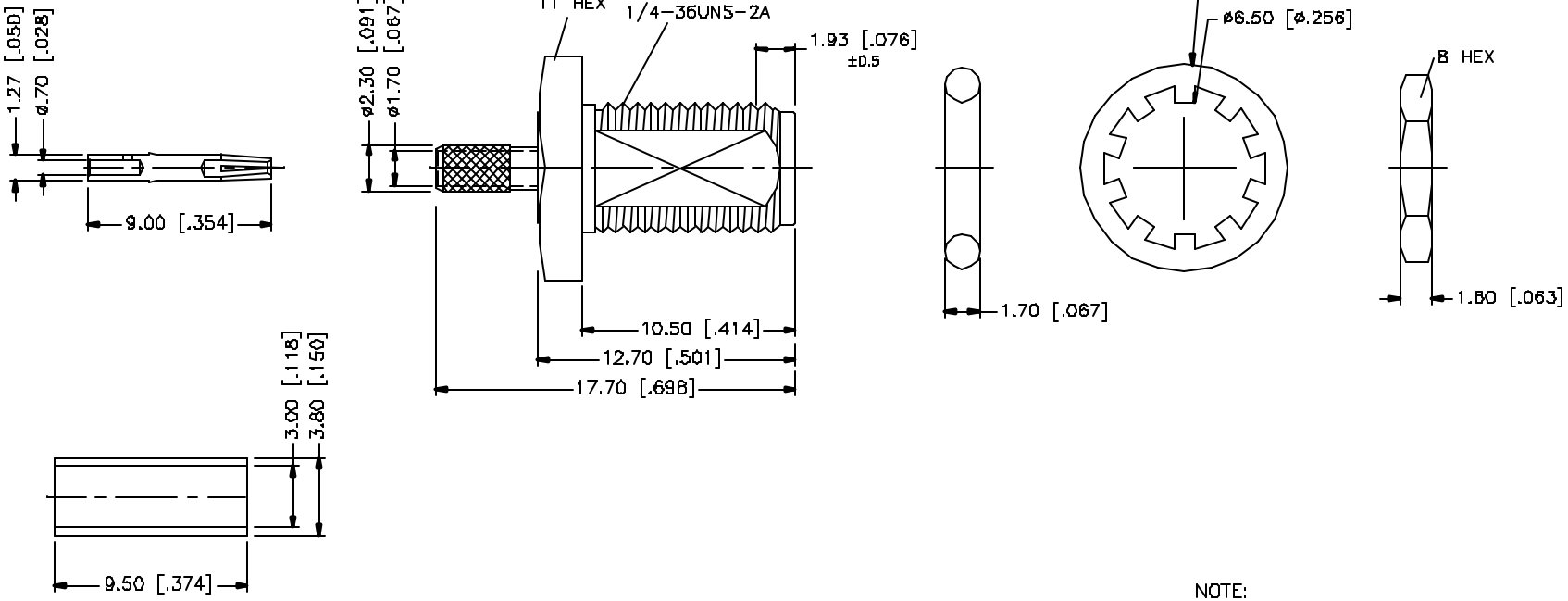

NOTE:

1. CRIMPED FERRULE
   HEX CRIMP SIZE .128"
2. CONTACT PIN TO SOLDER

	DESCRIPTION	MATERIAL	FINISH	QTY
8				
7	FERRULE	COPPER	GOLD	1
6	HEX NUT	BRASS	GOLD	1
5	LOCK WASHER	BRASS	GOLD	1
4	GASKET	SILICONE	RED	1
3	CONTACT PIN	BER. COPPER	GOLD	1
2	INSULATOR	TEFLON	NATURAL	1
1	BODY	BRASS	GOLD	1

UNLESS OTHERWISE SPECIFIED DIMENSIONS ARE IN MILLIMETERS. DIMENSIONS IN [ ] ARE IN INCHES AND FOR CUSTOMER REFERANCE ONLY.

UNLESS OTHERWISE SPECIFIED TOLERANCES FOR MILLIMETERS ARE:
0.5 – 6mm ± 0.20mm
6 – 30mm ± 0.40mm
30 – 120mm ± 0.50mm

UNLESS OTHERWISE SPECIFIED TOLERANCES FOR INCHES ARE:
.020 – .315 = ± 0.007"
.315 – 1.180 = ± 0.015"
1.180 – 4.724 = ± 0.020"

DO NOT SCALE DRAWING

APPROVALS		DATE
DRAWN	G.R.S.	10/05/04
CHECKED		
ISSUED		
SHEET	1 OF 1	
CAD FILE	C:/132/132284.DWG	

Amphenol Connex

PART DESCRIPTION
SMA BULKHEAD CRIMP JACK O-RING SEAL
(FOR RG-174/U, 188A/U, 316/U CABLE)

PART NO. 132284

DWG. NO.	REV.	SIZE	SCALE
132284.DWG	B	A	NA