REV.	DATE	DESCRIPTION
NC	09/28/99	INITIAL RELEASE
A	05/01/04	UPDATE DRAWING FORMAT

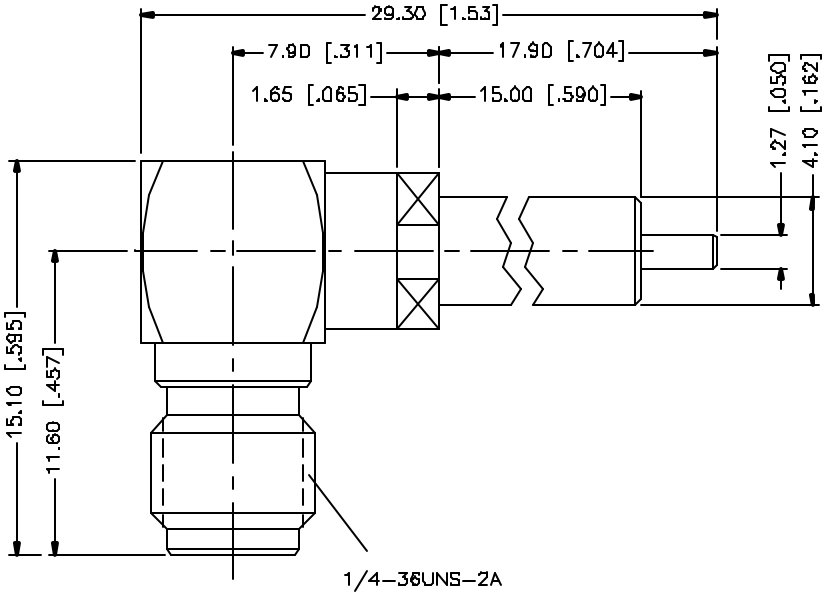

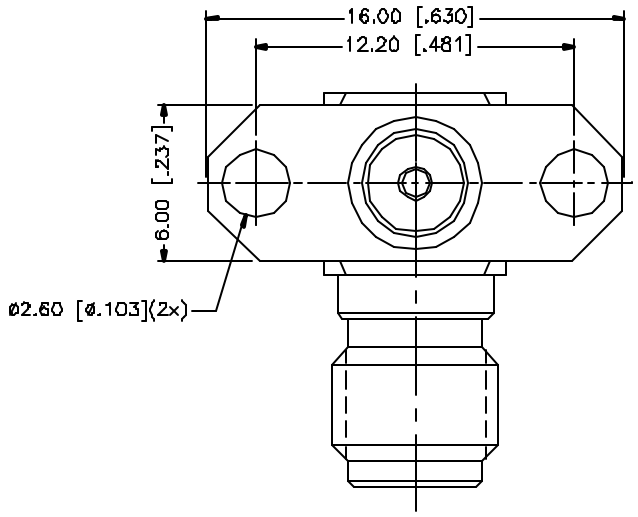

	DESCRIPTION	MATERIAL	FINISH	QTY
8				
7				
6				
5				
4	CONTACT PIN	BRASS	GOLD	1
3	INSULATOR	TEFLON	NATURAL	1
2	CONTACT PIN	BER. COPPER	GOLD	1
1	HOUSING/BODY	BRASS	GOLD	1

UNLESS OTHERWISE SPECIFIED DIMENSIONS ARE IN MILLIMETERS. DIMENSIONS IN [ ] ARE IN INCHES AND FOR CUSTOMER REFERANCE ONLY.

UNLESS OTHERWISE SPECIFIED TOLERANCES FOR MILLIMETERS ARE:
0.5 – 8mm ± 0.20mm
8 – 30mm ± 0.40mm
30 – 120mm ± 0.50mm

UNLESS OTHERWISE SPECIFIED TOLERANCES FOR INCHES ARE:
.020 – .315 = ± 0.007"
.315 – 1.180 = ± 0.015"
1.180 – 4.724 = ± 0.020"

DO NOT SCALE DRAWING

APPROVALS		DATE
DRAWN	G.R.S.	05/01/04
CHECKED		
ISSUED		
SHEET	1 OF 1	
CAD FILE	C:/132/132275.DWG	

Amphenol Connex

PART DESCRIPTION: SMA R/A PANEL JACK

PART NO.: 132275

DWG. NO.: 132275.DWG | REV.: A | SIZE: A | SCALE: NA