REV.	DATE	DESCRIPTION
NC	11/08/99	INITIAL RELEASE

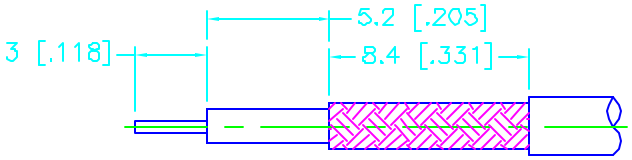

RECOMMENDED
CABLE STRIPPING DIM'S

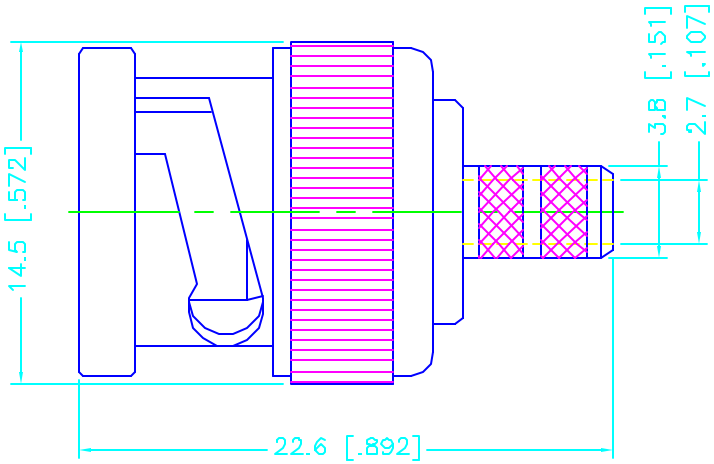

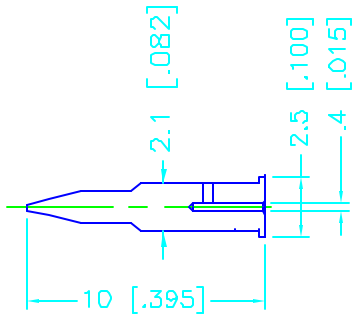

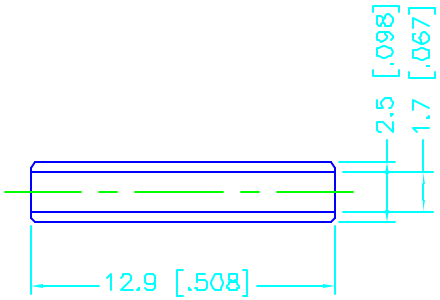

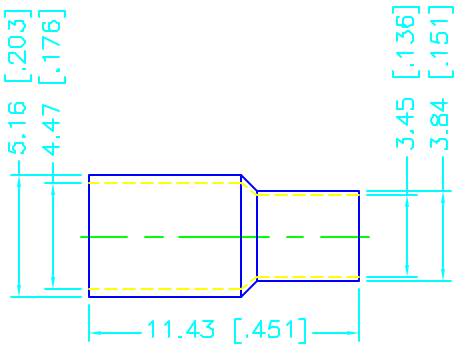

8			
7			
6			
5			
4	FERRULE	COPPER	NICKEL
3	INSULATOR	DELRIN	NATURAL
2	CONTACT PIN	BER. COPPER	GOLD
1	BODY	BRASS	NICKEL
	DESCRIPTION	MATERIAL	FINISH

UNLESS OTHERWISE SPECIFIED DIMENSIONS ARE IN MILLIMETERS

DIMENSIONS IN [ ] ARE IN INCHES FOR CUSTOMER REFERANCE ONLY

UNLESS OTHERWISE SPECIFIED TOLERANCES FOR MILLIMETERS ARE:
0.5–6 = ± 0.2
6–30 = ± 0.4
30–120 = ± 0.6
120–315 = ± 1
315–1000 = ± 1.6
1000–2000 = ± 2.4

DO NOT SCALE DRAWING

APPROVALS		DATE
DRAWN	G.R.S.	11/08/99
CHECKED		
ISSUED		

Connex Connector Corporation

TITLE: BNC CRIMP PLUG (FOR RG179/U DOUBLE BRAID CABLE)

SIZE	FSCM NO.	DWG. NO.	REV.
A	99001	112644.DWG	NC

SCALE	PART NO.	SHEET
NA	112644	1 OF 1