REV.	DATE	DESCRIPTION
NC	01/14/03	INITIAL RELEASE

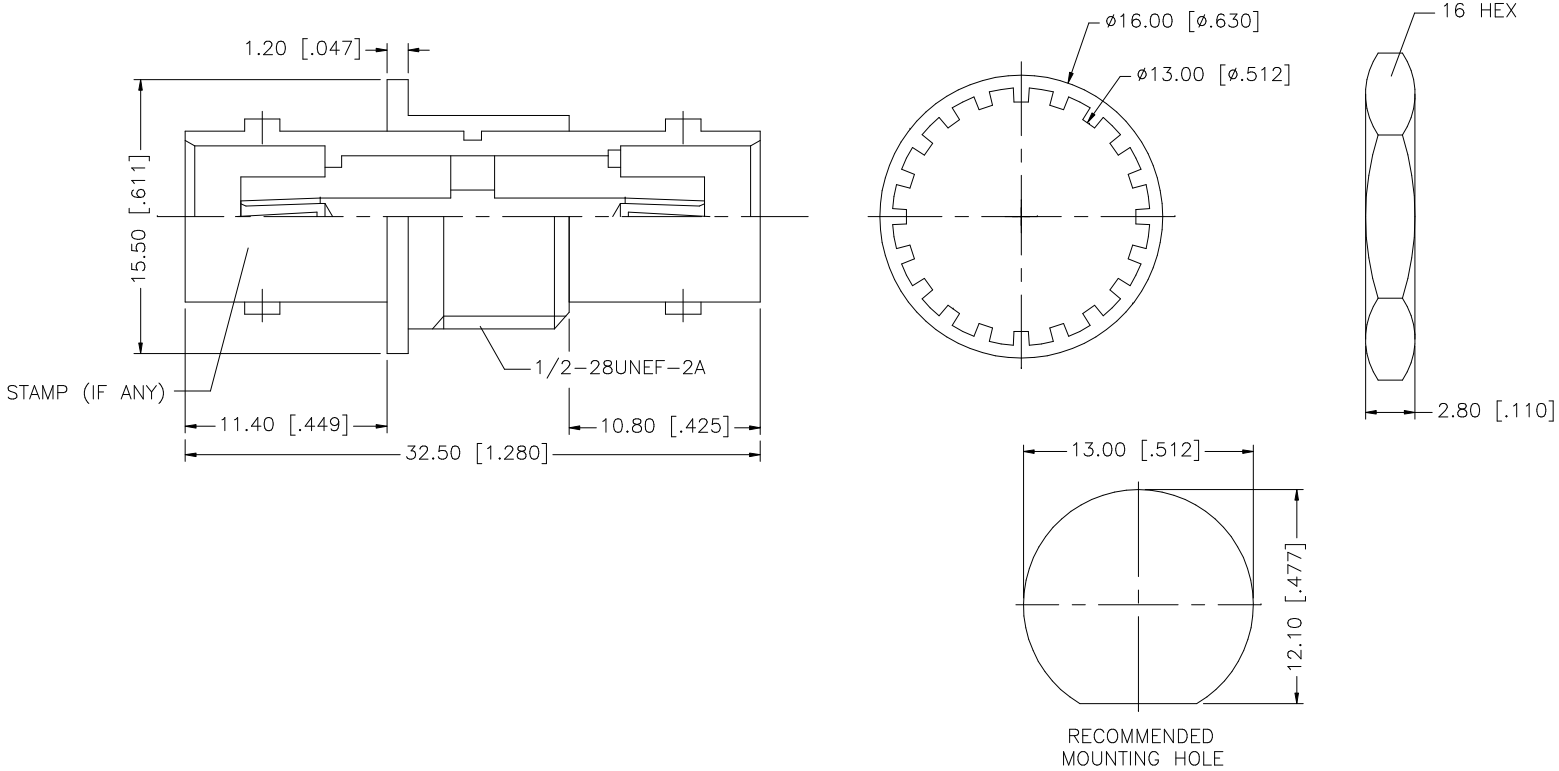

NOTE:

1. MAX. PANEL THICKNESS = 5.5mm

8				
7	HEX NUT	BRASS	NICKEL	1
6	LOCK WASHER	BRASS	NICKEL	1
5	LOCK RING	BRASS	NICKEL	1
4	CONTACT PIN	PHOS. BRONZE	GOLD	1
3	INSULATOR	DELRIN	NATURAL	1
2	INSULATOR	DELRIN	WHITE	1
1	BODY	BRASS	NICKEL	1
	DESCRIPTION	MATERIAL	FINISH	QTY

UNLESS OTHERWISE SPECIFIED DIMENSIONS ARE IN MILLIMETERS. DIMENSIONS IN [ ] ARE IN INCHES AND FOR CUSTOMER REFERANCE ONLY.

UNLESS OTHERWISE SPECIFIED TOLERANCES FOR MILLIMETERS ARE:

0.5 – 8mm ± 0.20mm
8 – 30mm ± 0.40mm
30 – 120mm ± 0.50mm

UNLESS OTHERWISE SPECIFIED TOLERANCES FOR INCHES ARE:

.020 – .315 = ± 0.007"
.315 – 1.180 = ± 0.015"
1.180 – 4.724 = ± 0.020"

DO NOT SCALE DRAWING

APPROVALS		DATE
DRAWN	G.R.S.	01/14/03
CHECKED		
ISSUED		
SHEET	1 OF 1	
CAD FILE	C:/112/112444.DWG	

Amphenol Connex

PART DESCRIPTION

BNC FEMALE TO FEMALE BULKHEAD ISOLATED ADAPTER

PART NO. 112444

DWG. NO. 112444.DWG | REV. NC | SIZE A | SCALE NA