REV.	DATE	DESCRIPTION
A	01/28/03	REVISE BODY DIMENSIONS
B	04/29/04	REMOVE CENTER CONTACT PIN

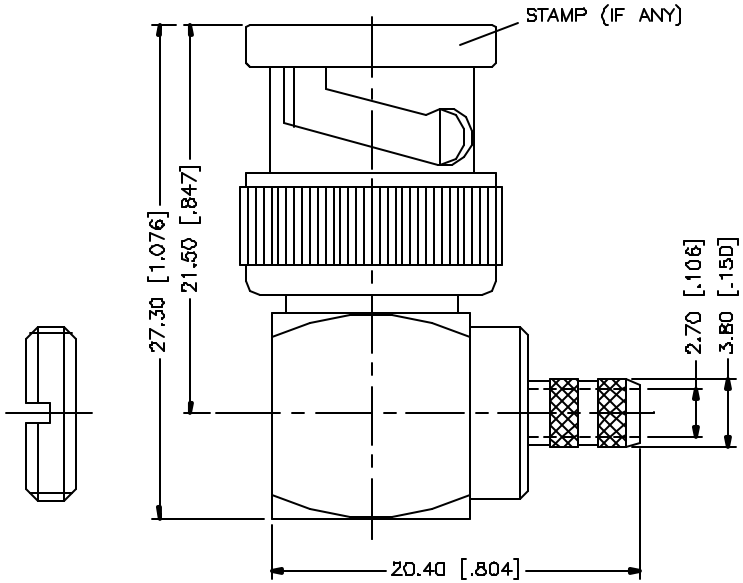

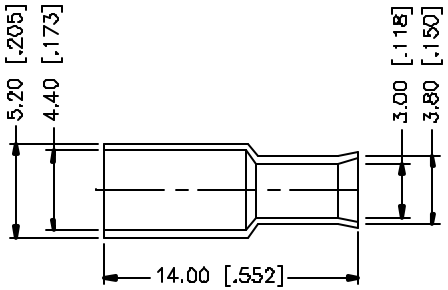

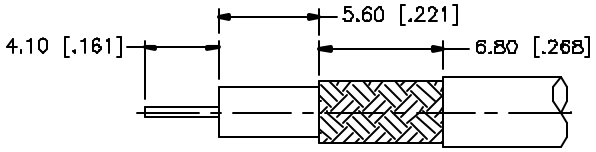

RECOMMENDED
CABLE STRIPPING DIM'S

	DESCRIPTION	MATERIAL	FINISH	QTY
8				
7				
6				
5	NUT	BRASS	NICKEL	1
4	FERRULE	COPPER	NICKEL	1
3	CONTACT PIN	BRASS	GOLD	1
2	INSULATOR	DELRIN	NATURAL	1
1	SHELL/BODY	BRASS	NICKEL	1

UNLESS OTHERWISE SPECIFIED DIMENSIONS ARE IN MILLIMETERS. DIMENSIONS IN [ ] ARE IN INCHES AND FOR CUSTOMER REFERANCE ONLY.

UNLESS OTHERWISE SPECIFIED TOLERANCES FOR MILLIMETERS ARE:

0.5 – 8mm ± 0.20mm
8 – 30mm ± 0.40mm
30 – 120mm ± 0.50mm

UNLESS OTHERWISE SPECIFIED TOLERANCES FOR INCHES ARE:

.020 – .315 = ± 0.007"
.315 – 1.180 = ± 0.015"
1.180 – 4.724 = ± 0.020"

DO NOT SCALE DRAWING

APPROVALS		DATE
DRAWN	G.R.S.	04/29/04
CHECKED		
ISSUED		
SHEET	1 OF 1	

CAD FILE C:/112/112179.DWG

Amphenol Connex

PART DESCRIPTION
BNC R/A CRIMP PLUG – 75ohm
(FOR RG-179 /U, 187A/U CABLE)

PART NO. 112179

DWG. NO. 112179.DWG | REV. B | SIZE A | SCALE NA