PRODUCT NUMBER (SEE NOTE 2)	CONTACT PLATING		ROHS COMPATIBILITY
	SEPARABLE INTERFACE	PRESS-FIT TAIL	
10028918-001	0.76um MIN GOLD OVER NICKEL	0.5um MIN TIN-LEAD OVER NICKEL	N/A
10028918-001LF		0.5um MIN MATTE TIN OVER NICKEL	SEE NOTE 8

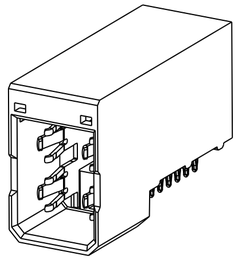

SCALE 2:1

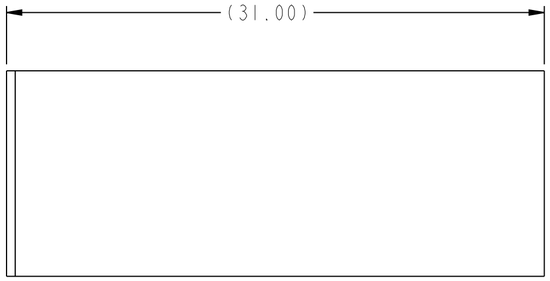

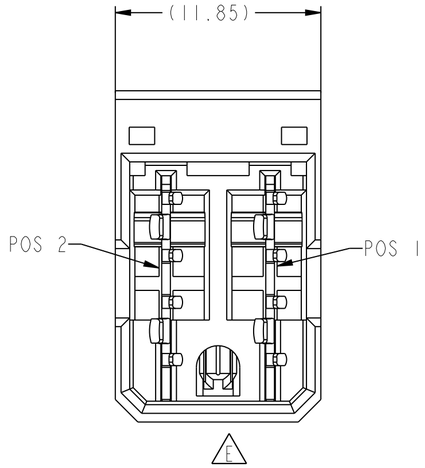

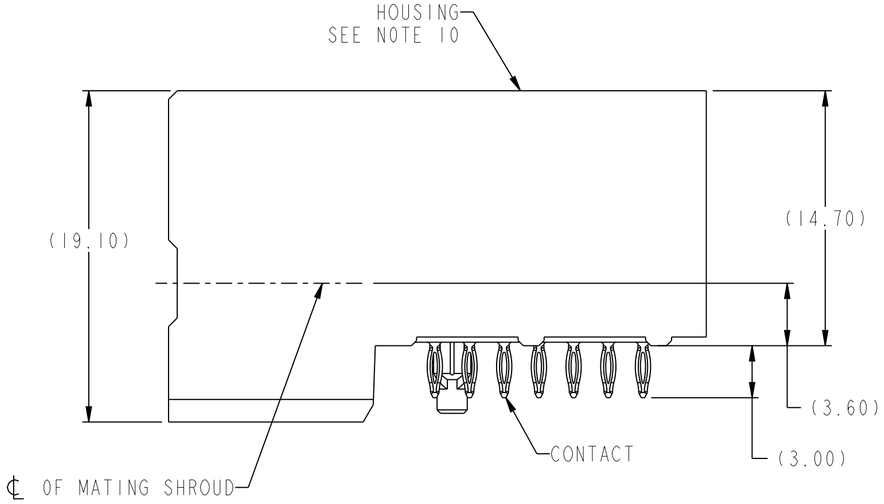

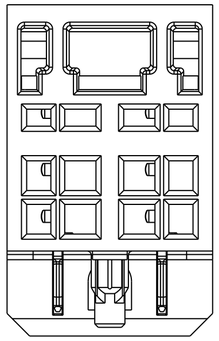

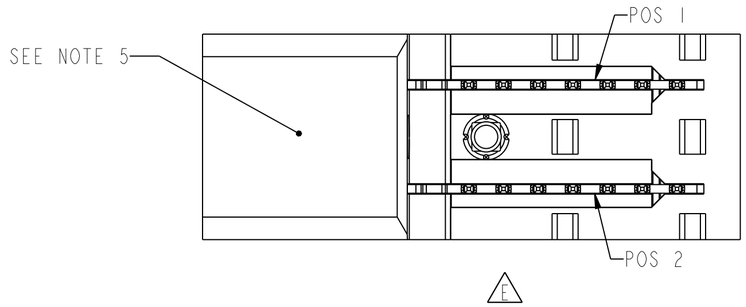

rev	ecn no	dr	date
A	V04-0697	WJS	2004-07-07
B	V05-0150	WJS	2005-02-10
C	S05-0301	WJS	2005-10-24
D	S06-0412	LS	2006-12-21
E	S08-0287	YK	2008-09-02
-	-	-	-
-	-	-	-

www.fciconnect.com

surface ASME Y14.5 | tolerance std ASME Y14.5 - | projection | MM

TOLERANCES UNLESS OTHERWISE SPECIFIED

Dr	W.J.SWAIN	2003-08-07	ANGULAR	LINEAR	0.X	±.3
Eng	W.J.SWAIN	2003-08-07			0.XX	±.10
Chr	C. H. TAN	2008-09-02	0° ±2°		0.XXX	±.050
Appr	JOEY NG	2008-09-02	Product family 2mm High Power			

size A2 | Scale 1:1 | ECN -- | Spec ref GS-12-220

title: HEADER ASSEMBLY, 1X2, POWER

dwg no 10028918 | Rev. E

catalog no - | CUSTOMER | sheet 1 of 2

Copyright FCI.

REV F - 2006-04-17

PDM: Rev:E

STATUS Released

Printed: Oct 17, 2008

TOP LAYER DESCRIPTION	TABLE I PLATED THROUGH-HOLE REQUIREMENTS							
	DRILLED HOLE DIAMETER	COPPER THICKNESS	TIN-LEAD THICKNESS	NICKEL THICKNESS	GOLD THICKNESS	TIN THICKNESS	SILVER THICKNESS	FINISHED HOLE DIAMETER
TIN-LEAD	0.81-0.86 (0.85 DRILL)	0.025 - 0.050	0.005 - 0.015	--	--	--	--	0.65 - 0.80
IMMERSION TIN	0.81-0.86 (0.85 DRILL)	0.025 - 0.050	--	--	--	0.9 - 1.5um	--	0.70 - 0.80
IMMERSION SILVER	0.81-0.86 (0.85 DRILL)	0.025 - 0.050	--	--	--	--	0.15 - 0.65um	0.70 - 0.80
COPPER (SEE NOTE 11)	0.81-0.86 (0.85 DRILL)	0.025 - 0.050	--	--	--	--	--	0.70 - 0.80
GOLD	0.81-0.86 (0.85 DRILL)	0.025 - 0.050	--	0.003 - 0.007	FLASH UP TO 0.0002	--	--	0.69 - 0.80

NOTES:

1. CONNECTOR MATERIALS:
   HOUSING: HIGH TEMPERATURE THERMOPLASTIC, BLACK
   UL 94V-0 COMPLIANT
   CONTACT: HIGH PERFORMANCE COPPER ALLOY
2. "LF" SUFFIX DENOTES "LEAD-FREE"
3. PRODUCT SPECIFICATION: GS-12-220
4. APPLICATION SPECIFICATION: GS-20-023
5. PRODUCT MARKING (PRODUCT NUMBER & LOT CODE) ON HOUSING.
6. MINIMUM NOMINAL PCB THICKNESS: 1.6mm
7. REFER TO CUSTOMER DRAWING SK100359II FOR INFORMATION REGARDING PCB LAYOUT OF POWER AND GUIDE MODULES RELATIVE TO SIGNAL MODULES.
8. PRODUCT MEETS EUROPEAN UNION DIRECTIVES AND OTHER COUNTRY REGULATIONS AS DESCRIBED IN FCI SPECIFICATION GS-22-008.
9. PACKAGING MEETS FCI SPECIFICATION GS-14-920.
10. HOUSING COMPONENT WILL WITHSTAND EXPOSURE TO 260°C PEAK TEMPERATURE FOR 60 SECONDS IN A CONVECTION, INFRA-RED, OR VAPOR PHASE REFLOW OVEN.
11. COPPER PLATING THICKNESS IN CENTER OF VIA HOLE CAN BE NO MORE THAN 0.003 LESS THAN OTHER AREAS.
12. A E SYMBOL WILL BE NEXT TO ANY DIMENSION, VIEW, OR NOTE WHICH HAS BEEN MODIFIED WITH THE CURRENT DRAWING REVISION

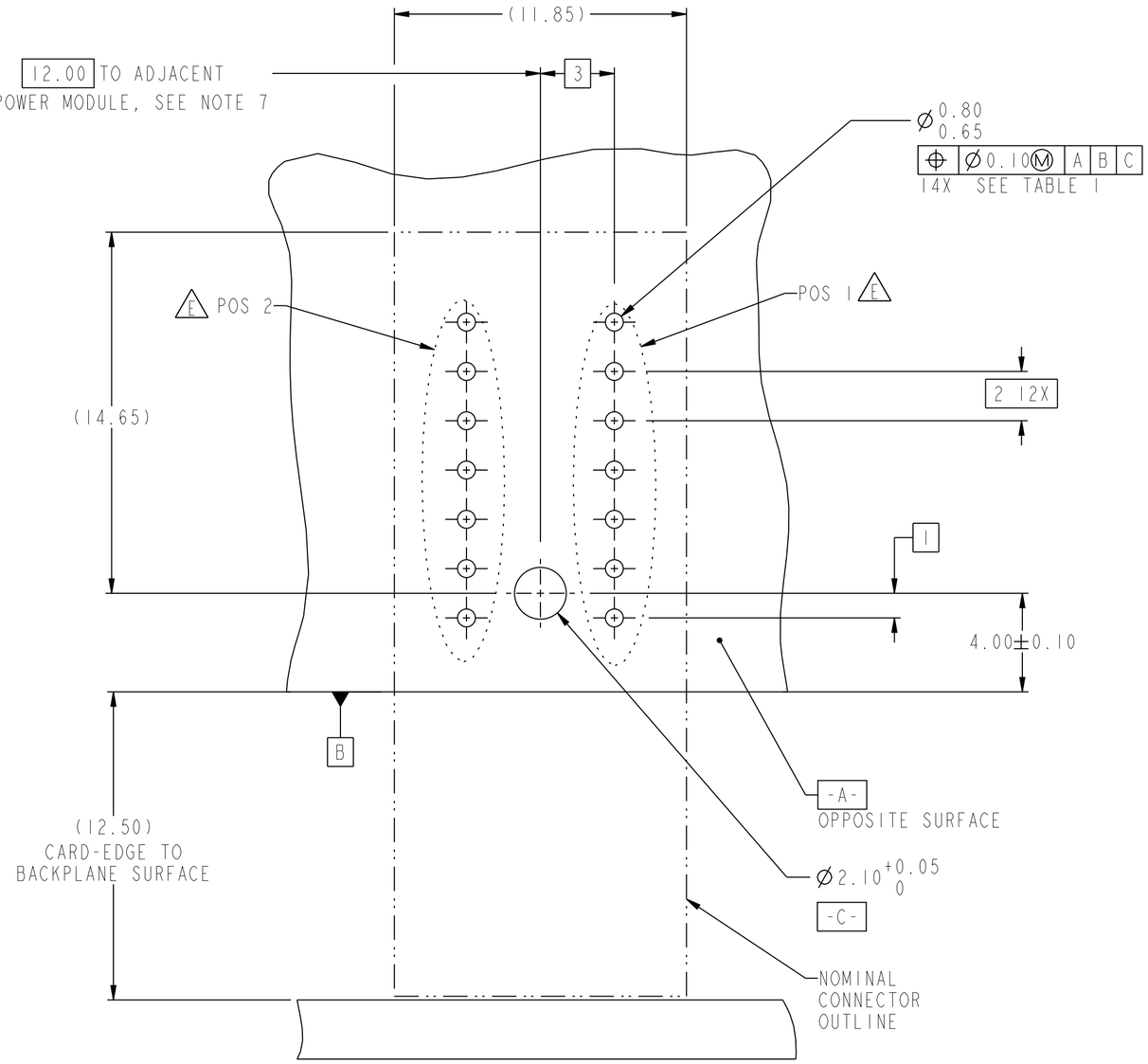

RECOMMENDED PCB LAYOUT,
COMPONENT SIDE
SEE NOTE 6
SCALE 6:1

title	HEADER ASSEMBLY, 1X2, POWER	dwg no 10028918	Rev. E
catalog no	-	CUSTOMER	sheet 2 of 2

Copyright FCI.