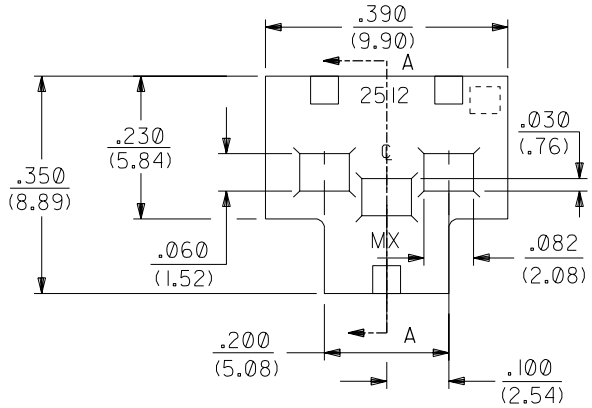

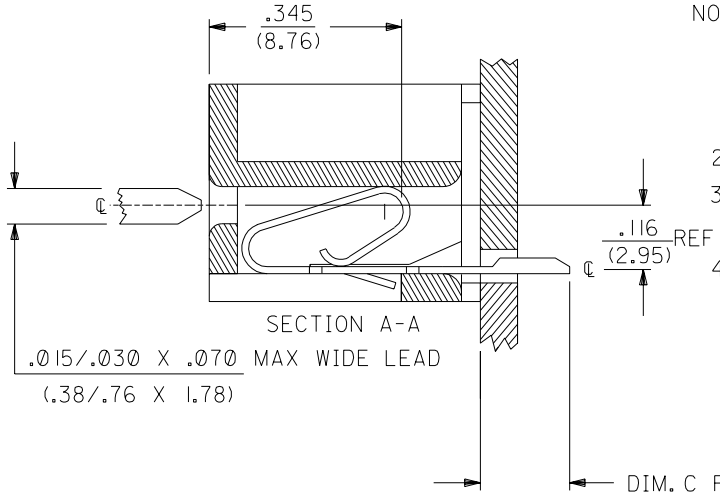

NOTES:

1. DIMENSIONS GIVEN ACROSS CENTERLINES ARE SYMMETRICAL ABOUT THOSE CENTERLINES WITHIN HALF THE TOTAL TOLERANCE.
2. MATERIAL: NYLON 6/6, 94V-2, NATURAL COLOR.
3. THIS PRODUCT COMPLIES WITH MOLEX PRODUCT SPECIFICATION PS-08-50.
4. FINISH: PER ES-88
   (909) * OVERALL HOT TIN DOP: .00254 MICROMETERS MIN.

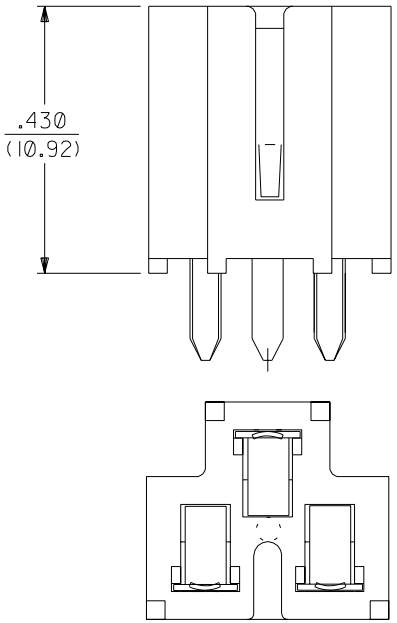

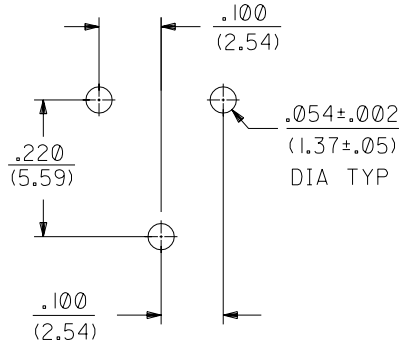

PC BOARD HOLE LAYOUT (.062 THK.)
DIMENSIONAL TOLERANCE ±.004/(.10)
UNLESS OTHERWISE NOTED

*THE PRIMARY SHIPPING CARTON WILL BE LABELED "COMPLIANT TO RoHS DIRECTIVE 2002/95/EC AND ELV ANNEX II OF DIRECTIVE 2002/53/EC". CARTONS WITHOUT THIS LABEL MAY CONTAIN PRODUCT WITH TIN-LEAD PLATING.

EDP NO.	ENG. NO.	HOUSING NO.	TERMINAL NO.	DIM. C
09-48-3031	A-2512-3	2512-3-5	2144-A1AA-(P909)B	.145 (3.68)

LTR.	REVISIONS	LTR.	REVISIONS
		M	REV. NOTE 4 ECN #UCP2004-1961 CSTEWART,04-04-07
		L	ADD TO CAD PER U4-0410 3-25-95 JJS

DIMENSIONS SHOWN (METRIC) INCH

UNLESS OTHERWISE SPECIFIED TOLERANCES: ANGULAR ± 1/2°

	INCH	METRIC
3 PLACE	± .010	---
2 PLACE	± .014	± 0.25
1 PLACE	---	± 0.36

DRAFT WHERE APPLICABLE MUST REMAIN WITHIN DIMENSIONS

DRWG. BY JJS | CHK'D. BY PATEL
APP'D. BY LENZ | SCALE :

C = 0 ▼ = 0 | REVISE ONLY ON CAD SYSTEM

TITLE
TRANSISTOR SOCKET
.200 CENTERS
FOR P.C.TAIL TERMINALS

MOLEX INCORPORATED
LISLE,ILL. 60532 U.S.A.

SHEET NO. 1 OF 1 | DATE 3/21/94

PART NO. SEE CHART | DRWG. NO. SDA-2512

FILE NAME S2512X1

THIS DRAWING CONTAINS INFORMATION THAT IS PROPRIETARY TO MOLEX INC. AND SHOULD NOT BE USED WITHOUT WRITTEN PERMISSION.

DIV. C | SIZE B