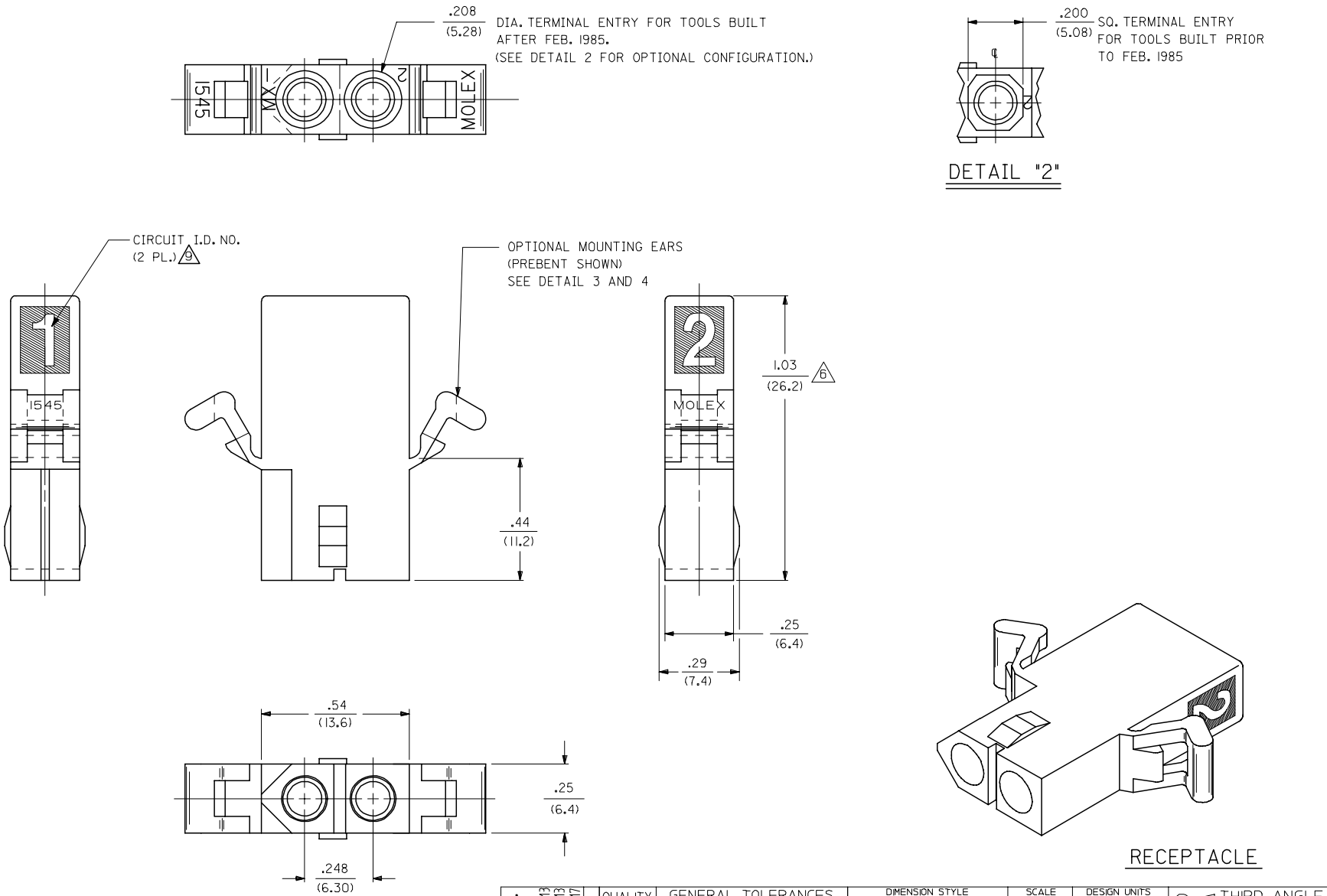

UPDATED NOTE REF.			
EC NO: UCP2006-2303			
DRWN:PRIDDER	2006/04/13		
CHKD:AELHAG	2006/04/13		
APPR:FSMITH	2006/04/17		
T1	REV	DESCRIPTION	

QUALITY SYMBOLS
▼=0
▽=0

GENERAL TOLERANCES (UNLESS SPECIFIED)

	mm	INCH
4 PLACES	± ---	± ---
3 PLACES	± ---	± .010
2 PLACES	± 0.25	± .014
1 PLACE	± 0.35	± ---
ANGULAR ± 1 °		

DRAFT WHERE APPLICABLE MUST REMAIN WITHIN DIMENSIONS

DIMENSION STYLE: IN/MM

DRAWN BY	GEP	DATE 8/9/88
CHECKED BY	RW	DATE 8/9/88
APPROVED BY	RAS	DATE 8/9/88

MATERIAL NO.: SEE CHART

SCALE: 4:1

DESIGN UNITS: INCH

THIRD ANGLE PROJECTION

TITLE: .093 DIA. HOUSING PLUG & RECEPTACLE 2 CKT., .248/(6.30) CTR.

molex MOLEX INCORPORATED

DOCUMENT NO.: SD-1545-*

SHEET NO.: 2 OF 3

SIZE: C

THIS DRAWING CONTAINS INFORMATION THAT IS PROPRIETARY TO MOLEX INCORPORATED AND SHOULD NOT BE USED WITHOUT WRITTEN PERMISSION

PLUG	
PART NO.	ENG. NO.
03-09-2021	1545-P
03-09-2022	1545-P1
03-09-7021	1545-PBK
03-09-7022	1545-P1BK
03-09-2023	1545-P2
03-09-7024	1545-P1RD
03-09-7023	1545-P1BU
50-36-1686	1545-P1-1

RECEPTACLE	
PART NO.	ENG. NO.
03-09-6021	1545-R3BK
03-09-6023	1545-R3RD
03-09-6024	1545-R3BU
03-09-1022	1545-R1
03-09-1023	1545-R2
03-09-6025	1545-R1BU
03-09-1027	1545-R3
50-36-1685	1545-R1-1

LEGEND : PLUG

1545-P***-*

OPTIONS:
BLANK = WITH STD. EARS
1 = WITHOUT EARS
2 = WITH PREBENT EARS

COLOR: BLANK=NATURAL COLOR
AM=AMBER BK=BLACK BU=BLUE
BN=BROWN GY=GRAY GN=GREEN
OR=ORANGE RD=RED YW=YELLOW

BLANK = MATERIAL CODE A
1 = MATERIAL CODE B

LEGEND : RECEPTACLE

1545-R***-*

BLANK = WITH STD. EARS & RAMPS
1 = WITHOUT EARS, WITH RAMPS
2 = WITHOUT EARS, WITHOUT RAMPS
3 = WITH PREBENT EARS & RAMPS

COLOR: BLANK=NATURAL COLOR
AM=AMBER BK=BLACK BU=BLUE
BN=BROWN GY=GRAY GN=GREEN
OR=ORANGE RD=RED YW=YELLOW

BLANK = MATERIAL CODE A
1 = MATERIAL CODE B

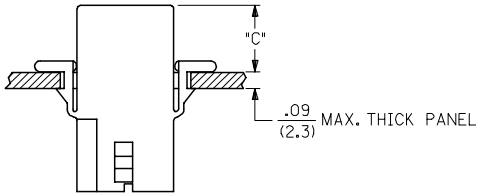

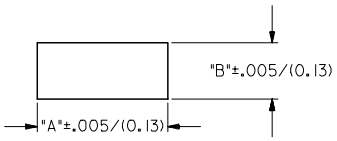

RECOMMENDED PANEL OPENING

(SCALE 2:1)

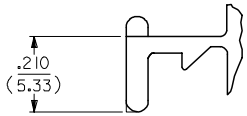

DETAIL 3

.093/(2.36) STANDARD MOUNTING EAR
(SCALE 4:1)

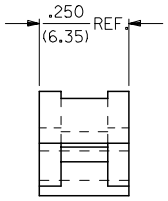

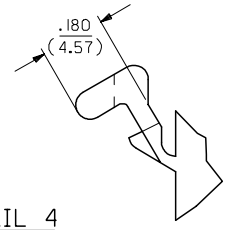

DETAIL 4

.093/(2.36) PREBENT MOUNTING EAR
(SCALE 4:1)

HOUSING	DIM. "A"	DIM. "B"	DIM. "C" (PREBENT)	DIM. "C" (STD. EAR)
PLUG	.800/(20.32)	.375/(9.53)	.40/(10.2)	.39/(9.9)
RECEPTACLE	.725/(18.42)	.312/(7.92)	.41/(10.4)	.40/(10.2)

NOTES:

1. MATERIAL: - A = NYLON, PA66, 94V-2, COLOR: SEE LEGEND.
   B = UL94V-0, PA6 NYLON, IEC 60335-1, 4TH EDITION GLOW WIRE CAPABLE.
2. FINISH: NONE.
3. PRODUCT SPECIFICATION: PS-02-09.
4. PACKAGING INFORMATION: PK-1545-001
5. .97/(24.6) REF. FOR TOOLS BUILT PRIOR TO FEB. 1985.
6. 1.00/(25.4) REF. FOR TOOLS BUILT PRIOR TO FEB. 1985.
7. RIBS ARE PRESENT ONLY ON PARTS WITH MOUNTING EARS.
8. EACH TERMINAL POCKET WILL ACCEPT UP TO:
   (2) #18 AWG WIRES HAVING 1/32" THK. INSULATION OR
   (1) #16 AWG WIRE HAVING 1/16" THK. INSULATION OR
   (1) #16 AWG & (1) 18 AWG WIRE HAVING 1/32" THK. INSULATION .
9. CIRCUIT I.D. NUMBERS ON SIDE OF HOUSING APPEAR ON PARTS FROM TOOLS BUILT AFTER 11/25/91.
10. PARTS CONFORM TO CLASS 'B' REQUIREMENTS OF COSMETIC SPECIFICATION PS-45499-002 EXCEPT MATERIAL OPTION 'B' MEETS CLASS 'C' REQUIREMENTS FOR SINK AND DISCOLORATION.

REV	DESCRIPTION
V	ADD MAT'L & P/N'S EC NO: UCP2007-2366 2007/05/25 DRWN:AELHAG 2007/06/01 CHKD:LSCHMIDT 2007/06/04 APPR:FSMITH

QUALITY SYMBOLS
▼=0
C=0

GENERAL TOLERANCES (UNLESS SPECIFIED)

	mm	INCH
4 PLACES	± ---	± ---
3 PLACES	± ---	± .010
2 PLACES	± 0.25	± .014
1 PLACE	± 0.35	± ---
ANGULAR ± 1 °		

DRAFT WHERE APPLICABLE MUST REMAIN WITHIN DIMENSIONS

DIMENSION STYLE: IN/MM
SCALE: 2:1
DESIGN UNITS: INCH
THIRD ANGLE PROJECTION

		DATE
DRAWN BY	GEP	8/9/88
CHECKED BY	RW	8/9/88
APPROVED BY	RAS	8/9/88

TITLE: .093/(2.36) HOUSING, PLUG & RECEPTACLE, 2 CKT., .248/(6.30) CTR.

molex MOLEX INCORPORATED

MATERIAL NO.: SEE CHART
DOCUMENT NO.: SD-1545-*
SHEET NO.: 3 OF 3
SIZE: C

THIS DRAWING CONTAINS INFORMATION THAT IS PROPRIETARY TO MOLEX INCORPORATED AND SHOULD NOT BE USED WITHOUT WRITTEN PERMISSION