PLUG		
PART NO.	ENG. NO.	
03-06-2041	1625-4P	
03-06-7041	1625-4PBK	OBSOLETE
03-06-2042	1625-4P1	
03-06-7042	1625-4P1BK	
NOT TOOLED	1625-4P2	
NOT TOOLED	1625-4P2BK	
	-	
	-	

RECEPTACLE		
PART NO.	ENG. NO.	
03-06-1041	1625-4R	OBSOLETE
03-06-6041	1625-4RBK	OBSOLETE
03-06-1042	1625-4R1	
03-06-6042	1625-4R1BK	
50-29-1758	1625-4R2	
	-	
	-	
	-	

LEGEND:

1625-4***

CIRCUIT SIZE

R = RECEPTACLE
P = PLUG

BLANK = WITH STANDARD MTG. EARS
1 = WITHOUT EARS
2 = WITH PREBENT MTG. EARS

BLANK = NOT DYED
AM=AMBER BK=BLACK BU=BLUE
BN=BROWN GY=GRAY GN=GREEN
OR=ORANGE RD=RED YW=YELLOW

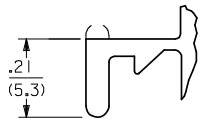

DETAIL 1
STANDARD MOUNTING EARS
(SCALE 4:1)

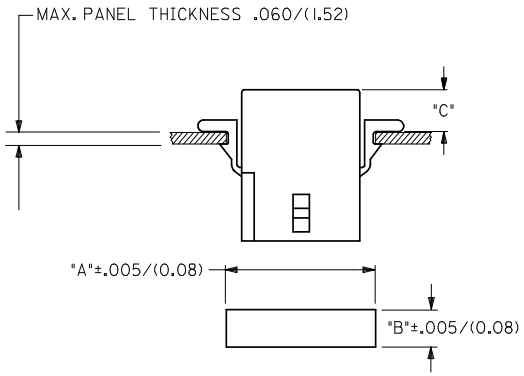

RECOMMENDED PANEL OPENING

HOUSING	DIM. "A"	DIM. "B"	"C" PREBENT EAR	"C" STANDARD EAR
PLUG	.865/(21.97)	.312/(7.92)	.19/(4.8)	.18/(4.6)
RECEPT.	.785/(19.94)	.260/(6.60)	.21/(5.3)	.20/(5.1)

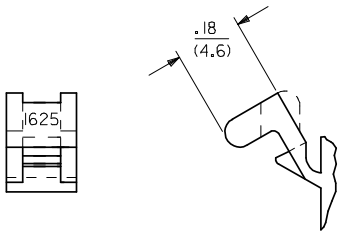

DETAIL 2
PREBENT MOUNTING EARS
(SCALE 4:1)

NOTES
1. MATERIAL - NYLON TYPE 6/6, 94V-2
2. FINISH N/A.
3. THIS PRODUCT COMPLIES WITH MOLEX PRODUCT SPECIFICATION PS-02-06
4. PACKAGING: PK-1625-003.
5. HOUSINGS FOR USE WITH MOLEX .062/(1.57) DIA. SERIES TERMINALS.
6. CIRCUIT I.D. NUMBERS ON SIDE OF HOUSING APPEAR ON PARTS FROM TOOLS BUILT AFTER 8/10/92. PARTS FROM TOOLS BUILT BEFORE THIS DATE WILL HAVE CIRCUIT I.D. RIBS ON HOUSING.
7. PARTS CONFROM TO CLASS 'B' REQUIREMENTS OF COSMETIC SPECIFICATION PS-45499-002.

OBSOLETE 1625-4R
EC NO: UCP2008-2649 2008/05/02
DRWN:AELHAG 2008/07/21
CH'KD:JBELL 2008/08/04
APPR:FSMITH
DESCRIPTION
REV N

QUALITY SYMBOLS
▼=0
▽C=0

GENERAL TOLERANCES (UNLESS SPECIFIED)

	mm	INCH
4 PLACES	± ---	± ---
3 PLACES	± ---	± .010
2 PLACES	± 0.25	± .014
1 PLACE	± 0.36	± ---
ANGULAR ± 1 °		

DRAFT WHERE APPLICABLE MUST REMAIN WITHIN DIMENSIONS

DIMENSION STYLE: IN/MM
SCALE: ---
DESIGN UNITS: INCH
THIRD ANGLE PROJECTION

DRAWN BY GC	DATE 8/17/92	TITLE: PLUG & RECEPTACLE HOUSINGS, 4 CIRCUIT, .062 DIA., .145 CENTERS
CHECKED BY RW	DATE 8/17/92	
APPROVED BY RAS	DATE 8/17/92	MOLEX INCORPORATED
MATERIAL NO. SEE CHART		DOCUMENT NO. SD-1625-4*
		SHEET NO. 2 OF 2

SIZE C

THIS DRAWING CONTAINS INFORMATION THAT IS PROPRIETARY TO MOLEX INCORPORATED AND SHOULD NOT BE USED WITHOUT WRITTEN PERMISSION