REV.	DESCRIPTION	DATE
A	NEW DRAWING	9/12/2006

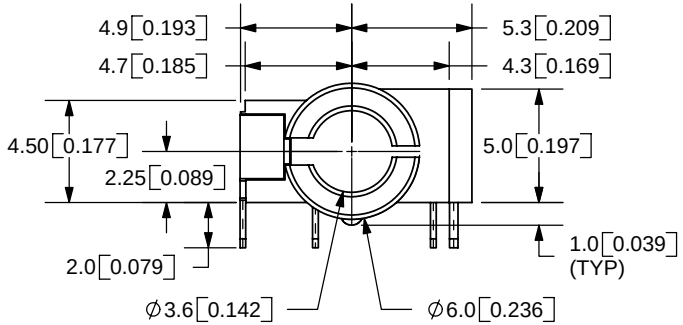

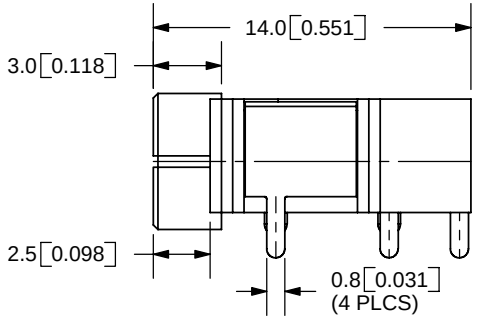

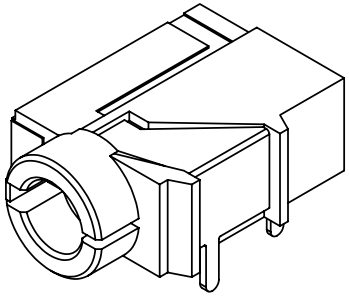

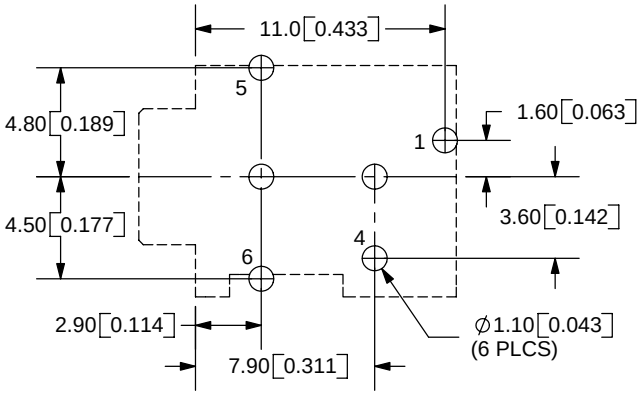

PCB LAYOUT
TOP VIEW

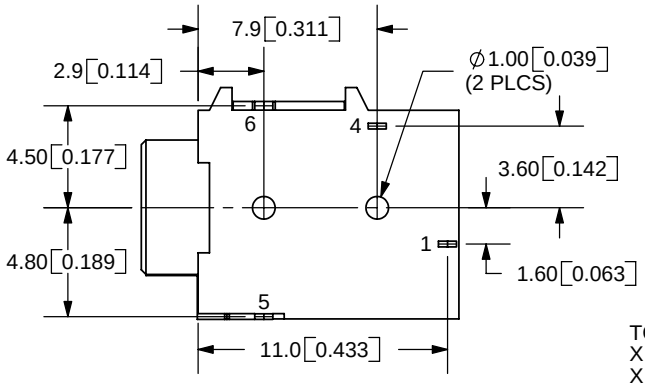

TOLERANCE:
X.X ±0.2mm
X.XX ±0.1mm
X.XXX ±0.05mm

RoHS

SPECIFICATIONS:
RATING: 16V DC @ 300mA
CONTACT RESISTANCE: 100m OHMS MAX
INSULATION RESISTANCE: 100M OHMS MIN: 500V DC
VOLTAGE WITHSTAND: 500V AC R.M.S. FOR 1 MINUTE
LIFE: 5,000 CYCLES

MODEL NO.	SJ-43514
SCHEMATIC	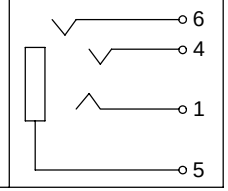

	MATERIAL	PLATING
TERMINAL 1	PBS	Tin
TERMINAL 4	Ti-Cu Alloy	Tin
TERMINAL 5	PBS	Gold
TERMINAL 6	PBS	Tin
BUSHING	Brass	Nickel
HOUSING	PBT	

CUI INC
20050 SW 112th Ave.
Tualatin, OR 97062
Phone: 503-643-4899
800-275-4899
Fax: 503-372-1266
Website: www.cui.com

TITLE: AUDIO JACK W/4 CONDUCTORS 3.5mm	REV: A
PART NO. SJ-43514	UNITS: MM [INCHES]
DRAWN BY: ZRJ	APPROVED BY:
SCALE: 3:1	

PC FILE NAME: SJ-43514

COPYRIGHT 2006 BY CUI INC.