REV.	DESCRIPTION	DATE
A	NEW DRAWING	1/3/2006
B	updated PCB layout	2/6/2008

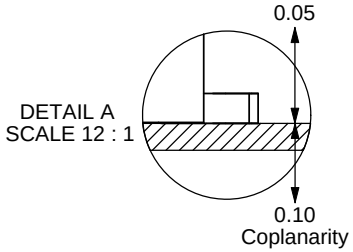

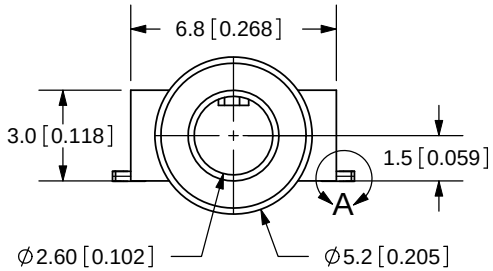

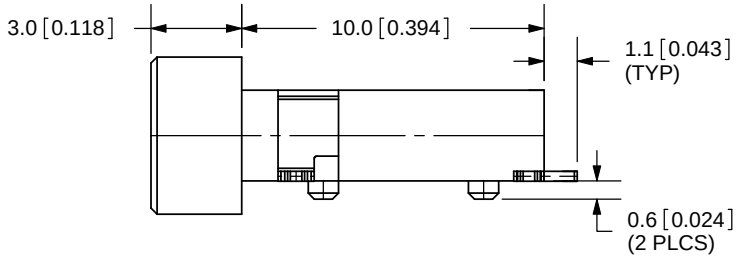

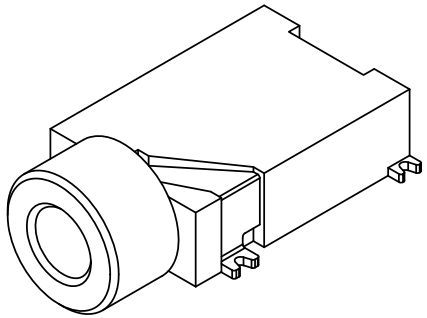

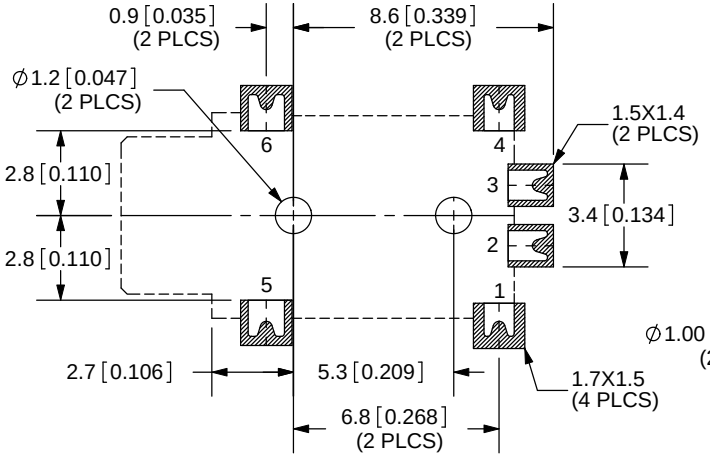

PCB LAYOUT
TOP VIEW

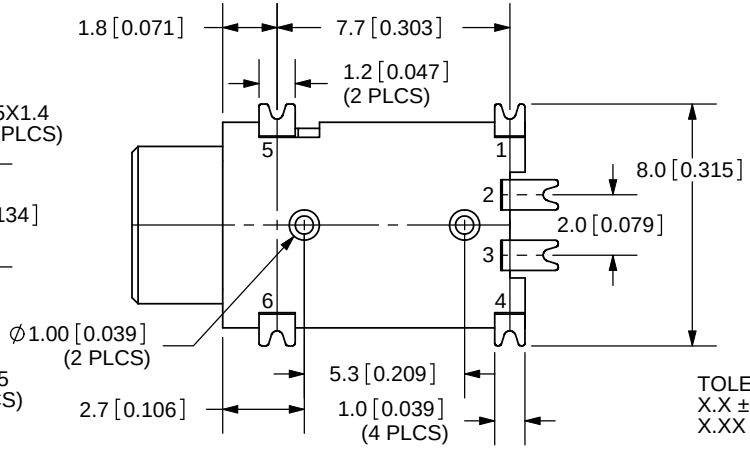

TOLERANCE:
X.X ±0.3mm
X.XX ±0.2mm

RoHS

SPECIFICATIONS:
RATING: 16V DC @ 300mA
CONTACT RESISTANCE: 100m OHMS MAX
INSULATION RESISTANCE: 100M OHMS MIN: 500V DC
VOLTAGE WITHSTAND: 500V AC R.M.S. FOR 1 MINUTE
LIFE: 5,000 CYCLES

MODEL NO.	SJ-42526-SMT
SCHEMATIC	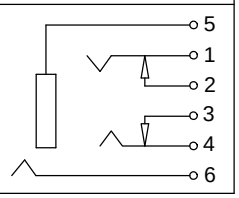

	MATERIAL	PLATING
TERMINAL 1	Titanium Copper	Silver
TERMINAL 2	Brass	Silver
TERMINAL 3	Brass	Silver
TERMINAL 4	Titanium Copper	Silver
TERMINAL 5	Phosphor Bronze	Silver
TERMINAL 6	Brass	Gold
HOUSING	PBT	

CUI INC
20050 SW 112th Ave.
Tualatin, OR 97062
Phone: 503-612-2300
800-275-4899
Fax: 503-612-2383
Website: www.cui.com

TITLE: SMT AUDIO JACK W/4 CONDUCTORS 2.5mm	REV: B
PART NO. SJ-42526-SMT	UNITS: MM [INCHES]
DRAWN BY: ZRJ	APPROVED BY:
SCALE: 4:1	

PC FILE NAME:
SJ-42526-SMT

COPYRIGHT 2008 BY CUI INC.